Dasqua®

2020-2021
(2nd Edition)





Dasqua®

E-mail:**service@dasquatools.com**

Headquarters Italy : Dasqua S.R.L.
Via Codognino No. 4, 26854 Cornegliano Laudense (LO),Italy

America Branch: Dasqua USA Ltd.
14758 Yorba Court,Chino,CA 91710 USA

China Branch : Dasqua Technology Ltd.
No.99,West Section of Hupan Road,Chengdu,Sichuan Pilot Free Trade Zone,China

Forza Blu!

The color of the year 2020 is classic blue. According to pantone institute, it is the color of traditional blue Jeans, fresh blueberries and the timeless consistency and reassurance presented by DASQUA.

Long ago in the early 1980s, when Dasqua embarked on supplying machinist calipers in Nord Italy, most of us looked at 2020 as the future. But today we are here! The blue Dasqua are now deemed to be the symbol of reliability in our field. Combining both the tradition and spirit, with headquarters in Lodi, Italy, and two additional fulfillment facility strategically located in Los Angles.(for Pan-America), and Shanghai(For Asia area),Dasqua is currently serving customers in more than 50 countries globally.

The past decades have witnessed a significant change at Dasqua. And the results were driven by an array of tiny improvements. In 2008, we launched the first rechargeable digital caliper in the World, granted global patent. Last year, we changed to a latest carbide material for micrometer anvils. This new carbide replaces the traditional YG6 carbide which would naturally wear off, so now we have long-lasting accuracy assured. We also started making precision ground STAINLESS STEEL threading rod this year to instead the alloy steel or carbon steel rods used for transmission of measurement. This change is a substantive innovation for movement in worksites where water or oil is a problem. These small improvements are sending ripples across the ocean of our industry. And now we are working on a wireless data transmission system covering major measuring tools, optimizing manufacturing and QC management.

Above all, no matter it is a marble-material plate sourced from China or a 100% European made 0.001mm resolution dial test indicator, we deliver you with pride and confidence----when it comes to precision measurement, Dasqua makes the difference in the lineup.
Our statement of core value as well as our long cultivated common culture at Dasqua is:
Honest; Reliability; Responsibility. ---------H.R.R

Facing with the keen competition and continuing requirement of customers, we quite understand that even we have gained all these achievement, the decline is always in the offing. We can never stop our step.

If you have any suggestions, or comments, please feel free to advise us. We value that as the most pivotal impulse for our pace forward. We, at Dasqua, will keep striving to ensure our blue products are the best for you as before, and always into the future!

Yours truly
The Dasqua team

ABOUT US



MANUFACTURING

We are now still keeping exact procedure combined with state-of-the-art machinery for our precision machining process while improving product by using latest material and applying new engineering procedure.



TRACEABLE QC SYSTEM

Every piece of Dasqua measuring tools is tested for approval by international in-door CNAS-qualified Labs, which are equipped with inspection system and devices from ZEISS, HAIMER, and MARPOS. Calibration certificate attached with product is traceable with respective DIN and ANSI standards. Strict visual inspection is applied to avoid any slight scratch even on non-measuring surface.

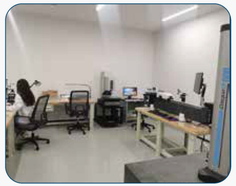

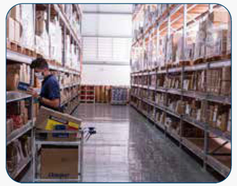

FAST DELIVERY

We owned fast delivery from-stock (Europe, America, Asia) And we also have set the target of 90% fulfillment rate in our distributions by the end of 2020,covering 800+ most popular used sizes/specifications in stock to meet the daily requirement of customers globally.

WARRANTY AND SERVICE/TRAINING COURSE

Warranty is an indication of manufacturers' confidence for the product they supplied. All Dasqua measuring tools are guaranteed for TWO years(Starting from invoice date) on accuracy and workmanship. We provide all spare parts and training-courses for our national agents and distributors worldwide. All final customers can obtain technical support from local distributor or online (www.Dasquatools.com).



CONTENTS

01 CALIPER

Calipers	001-022
Special Calipers	023-032

02 MICROMETER

Micrometers	033-055
Special Micrometers	056-070

03 INDICATOR

Dial Indicators	071-085
Dial Test Indicators	086-092
Dial Bore Gauges	093-098
Thickness Gauges	099-107
Magnetic Bases	107-115

04 HEIGHT GAUGE

Height Gauges	116-119

05 ANGLE MEASURING

Angle Measuring Tools	120-125
Angle Comparing Tools	126-131

06 PRECISION LEVEL

Precision Levels	132-136

07 CALIBRATION GAUGE BLOCK

Thread Plug Gauges	137-141
Calibration Gauge Block Sets	142-147
Pin Gauges	148-148

08 TOOL SETTING MEASURING GAUGE

Precision Levels	149-160

09 COMPARATIVE MEASURING GAUGE

Feeler Gauges	161-165
Angle Gauges	166-168
Taper Gauges	169-170
Other Gauges	170-171

10 WELDING GAUGES

Welding Gauges	172-177

11 COMBINATION KITS

Measuring Tool Sets	178-184

12 INSTRUMENT

Instruments	185-215

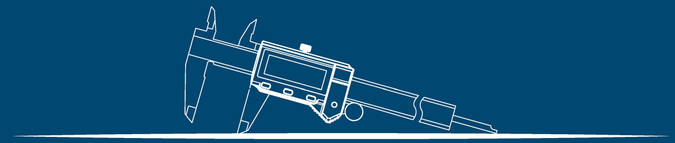

CALIPER

BORN IN ITALY, RAISED BY THE WORLD

MONOBLOCK VERNIER CALIPER

- Strictly made in accordance with DIN862
- Supplied in fitted solid ABS case and warranty cad in it

DIN 862

01 02 03 04

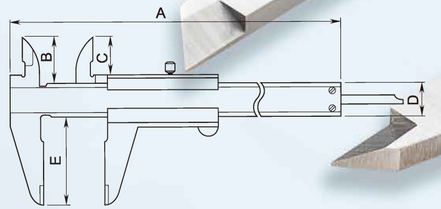

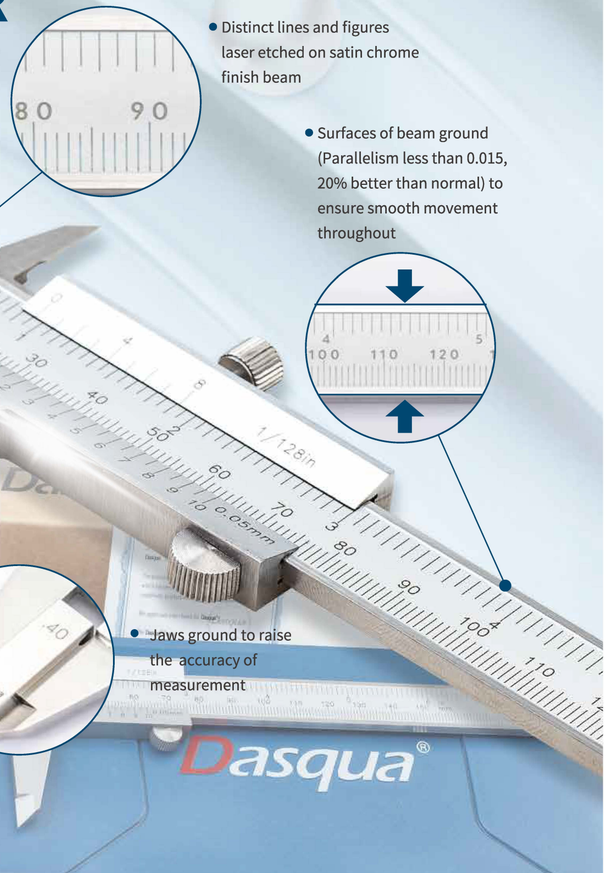

- Distinct lines and figures laser etched on satin chrome finish beam
- Surfaces of beam ground (Parallelism less than 0.015, 20% better than normal) to ensure smooth movement throughout
- Jaws ground to raise the accuracy of measurement

Unit:mm

Code	Range	Graduation	A	B	C	D	E	Accuracy
1120-3114	0-100/0-4"	0.05/1/128"	160	18	13.5	12	30	0.05
1120-3115	0-150/0-6"	0.05/1/128"	235	21	16.5	16	40	0.05
1120-3116	0-160/0-6.3"	0.05/1/128"	238	23	17.5	15.5	40	0.05
1120-3120	0-200/0-8"	0.05/1/128"	298	24	19.5	16	50	0.05
1120-3130	0-300/0-12"	0.05/1/128"	410	28	22	20	64	0.05
1380-3004	0-100/0-4"	0.02/1/128"	160	18	13.5	12	30	0.03
1380-3005	0-150/0-6"	0.02/0.001"	235	21	16.5	16	40	0.03
1380-3006	0-160/0-6.3"	0.02/0.001"	238	23	17.5	15.5	40	0.03
1380-3010	0-200/0-8"	0.02/0.001"	298	24	19.5	16	50	0.03
1380-3015	0-300/0-12"	0.02/0.001"	410	28	22	20	64	0.03

VERNIER CALIPER

DIN 862

01 02 03 04

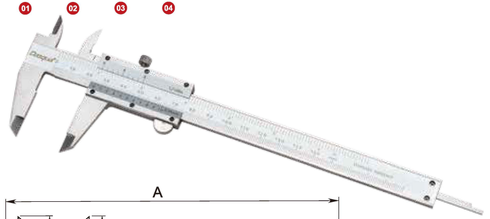

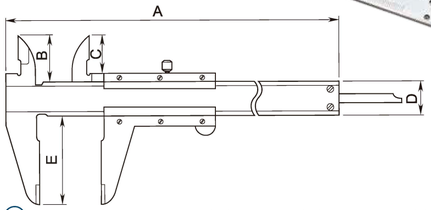

- 4 usages for measuring outside diameter, inside diameter, step and depth
- Made of solid stainless steel
- Strictly made in accordance with DIN862
- Distinct lines and figures etched against satin chrome finish
- With locking screw for stable reading

Unit:mm

Code	Range	Graduation	A	B	C	D	E	Accuracy
1110-3114	0-100/0-4"	0.05/1/128"	160	18	13.5	12	30	0.05
1110-3115	0-150/0-6"	0.05/1/128"	235	21	16.5	16	40	0.05
1110-3120	0-200/0-8"	0.05/1/128"	298	24	19.5	16	50	0.05
1110-3130	0-300/0-12"	0.05/1/128"	410	26	20	18	55	0.05
1550-2004	0-100/0-4"	0.02/0.001"	160	18	13.5	12	30	0.03
1550-2005	0-150/0-6"	0.02/0.001"	235	21	16.5	16	40	0.03
1550-2010	0-200/0-8"	0.02/0.001"	298	24	19.5	16	50	0.03
1550-2015	0-300/0-12"	0.02/0.001"	410	26	20	18	55	0.03

VERNIER CALIPER

WITH FINE ADJUSTMENT

DIN 862

01 02 03 04

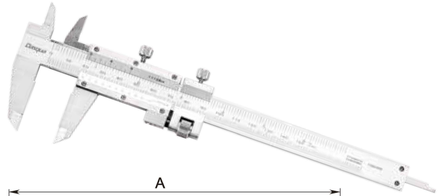

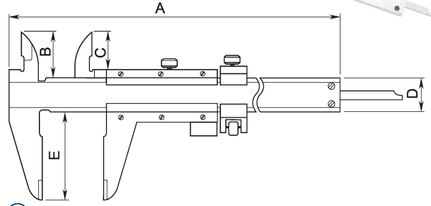

- 4 usages for measuring outside diameter, inside diameter, step and depth
- Made of solid stainless steel
- Strictly made in accordance with DIN862
- Distinct lines and figures etched against satin chrome finish
- With locking screw for stable reading
- With fine adjustment

Unit:mm

Code	Range	Graduation	A	B	C	D	E	Accuracy
1210-3105	0-150/0-6"	0.05/1/128"	235	21	16.5	16	40	0.05
1210-3110	0-200/0-8"	0.05/1/128"	298	24	19.5	16	50	0.05
1210-3115	0-300/0-12"	0.05/1/128"	410	26	20	18	55	0.05
1490-7005	0-150/0-6"	0.02/0.001"	235	21	16.5	16	40	0.03
1490-7010	0-200/0-8"	0.02/0.001"	298	24	19.5	16	50	0.03
1490-7015	0-300/0-12"	0.02/0.001"	410	26	20	18	55	0.03

MONOBLOCK VERNIER CALIPER

WITH FINE ADJUSTMENT

DIN 862

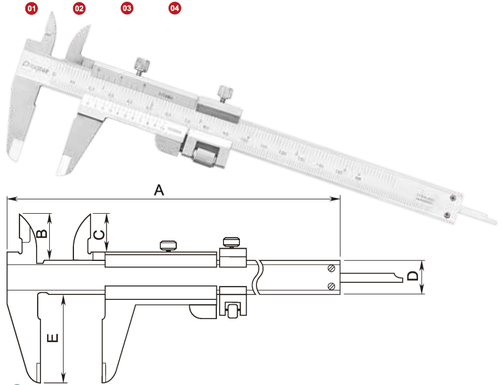

- 4 usages for measuring outside diameter, inside diameter, step and depth
- Made of solid stainless steel
- Strictly made in accordance with DIN862
- Distinct lines and figures etched against satin chrome finish
- With locking screw for stable reading
- With fine adjustment
- Monoblock structure

Unit:mm

Code	Range	Graduation	A	B	C	D	E	Accuracy
1220-3105	0-150/0-6"	0.05/1/128"	235	21	16.5	16	40	0.05
1220-3110	0-200/0-8"	0.05/1/128"	298	24	19.5	16	50	0.05
1220-3115	0-300/0-12"	0.05/1/128"	410	28	22	20	64	0.05
1560-7005	0-150/0-6"	0.02/0.001"	235	21	16.5	16	40	0.03
1560-7010	0-200/0-8"	0.02/0.001"	298	24	19.5	16	50	0.03
1560-7015	0-300/0-12"	0.02/0.001"	410	28	22	20	64	0.03

MONOBLOCK VERNIER CALIPER

WITH AUTO-LOCKING

DIN 862



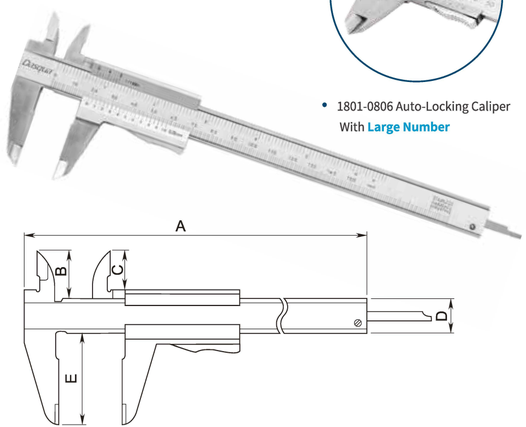

- 1801-0806 Auto-Locking Caliper With Large Number

- The whole blade of the beam is vacuum hardened with uniform hardness, guaranteeing wear-resistance and longer service life
- The upper and lower parts of the ruler are precisely ground to ensure smooth use
- Strictly in accordance with DIN862 standard
- Made of high quality stainless steel

Unit:mm

Code	Range	Graduation	A	B	C	D	E	Accuracy
1801-0810	0-150/0-6"	0.05/1/128"	235	21	16.5	16	40	0.05
1801-0809	0-150/0-6"	0.02/0.001"	235	21	16.5	16	40	0.03
1801-0806	0-150	0.05	235	21	16.5	16	40	0.05

CALIPER CALIBRATION GAUGE BLOCK SET

DIN 861

MADE OF STEEL



- Gauge block calibration set for calipers
- Made of steel
- Extremely wear resistance and corrosion resistance

Unit:mm

Code	Grade	Contents
6111-1204	1	1 each of gauge block 41.3,131.4;Setting ring Dia. 20.0,4.0
6112-1204	2	1 each of gauge block 41.3,131.4;Setting ring Dia. 20.0,4.0

CALIPER CALIBRATION GAUGE BLOCK SET

DIN 861

MADE OF CERAMIC



- Gauge block calibration set for calipers
- Extremely wear resistance and corrosion resistance

Unit:mm

Code	Grade	Contents
6201-3505	1	1 each of gauge block 41.3,131.4;

DEPTH BASE ATTACHMENT

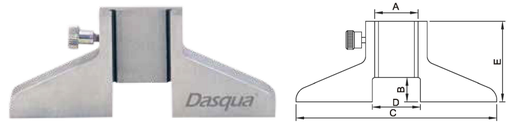

- Increasing the stability of caliper measurement
- Made of solid stainless steel
- Measuring surfaces ground for ultimate accuracy

Unit:mm

Code	A	B	C	D	E	Application
3001-1001	16.5	9	75	18	30	Base Length 75mm,for width of the beam 16mm



VERNIER CALIPER

WITH NIB STYLE JAWS

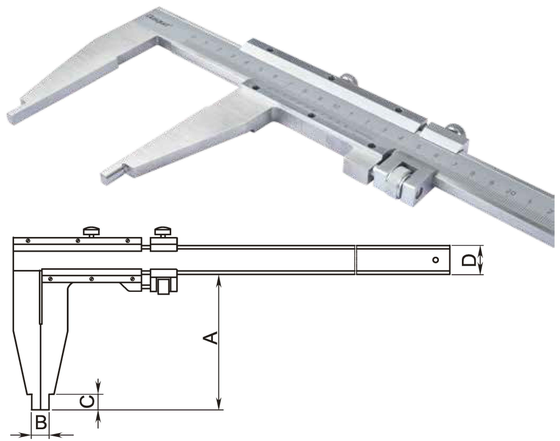

- With fine adjustment
- Hardened ground jaws with precision lapped measuring faces
- Satin chrome finish,hardened stainless steel throughout for longer life
- Distinct lines and figures etched against satin chrome finish

Unit:mm

Code	Range	Graduation	A	B	C	D	Accuracy
1300-0005	0-500/0-20"	0.02/0.001"	100	10	12	25	±0.05
1300-0006	0-500/0-20"	0.02/0.001"	150	10	12	32	±0.05
1300-0010	0-600/0-24"	0.02/0.001"	100	10	12	25	±0.05
1300-0011	0-600/0-24"	0.02/0.001"	150	10	12	32	±0.05
1300-0015	0-1000/0-40"	0.02/0.001"	125	20	18	32	±0.07
1300-0016	0-1000/0-40"	0.02/0.001"	200	20	18	32	±0.07
1300-0020	0-1500/0-60"	0.02/0.001"	150	30	20	41.5	±0.11
1300-0025	0-2000/0-80"	0.02/0.001"	200	30	20	52	±0.14

VERNIER CALIPER

WITH NIB STYLE&STANDARD JAWS

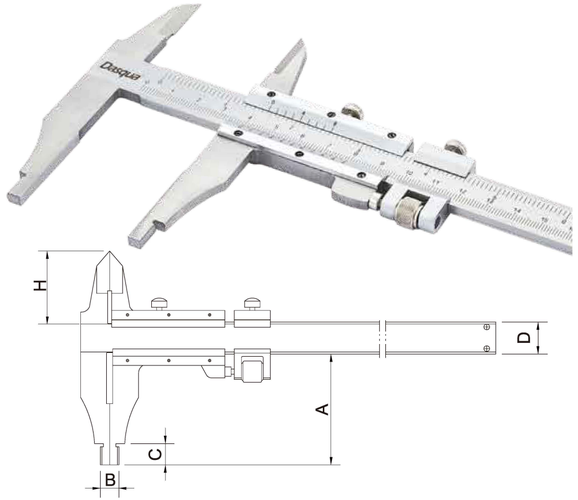

- With fine adjustment
- Hardened ground jaws with precision lapped measuring faces
- Satin chrome finish,hardened stainless steel throughout for longer life
- Distinct lines and figures etched against satin chrome finish

Unit:mm

Code	Range	Graduation	A	B	C	D	H	Accuracy
1300-0001	0-300/0-12"	0.02/0.001"	60	10	10	17	36.5	±0.04
1300-0002	0-500/0-20"	0.02/0.001"	100	10	12	25	55	±0.05
1300-0003	0-600/0-24"	0.02/0.001"	100	10	12	25	55	±0.05
1300-0004	0-1000/0-40"	0.02/0.001"	125	20	18	32	64	±0.07

MONOBLOCK VERNIER CALIPER

WITH NIB STYLE JAWS

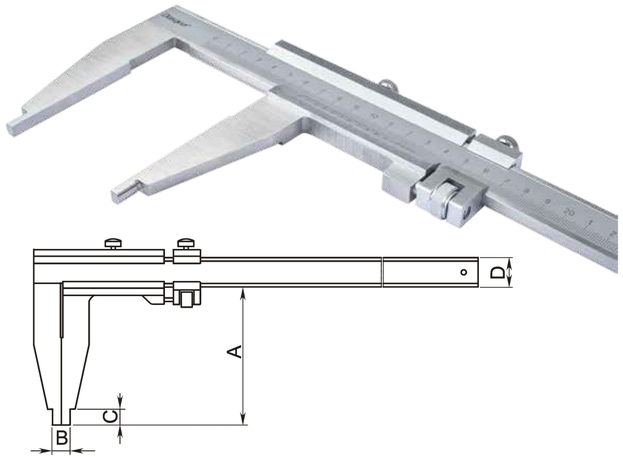

- With fine adjustment
- Hardened ground jaws with precision lapped measuring faces
- Satin chrome finish,hardened stainless steel throughout for longer life
- Distinct lines and figures etched against satin chrome finish

Unit:mm

Code	Range	Graduation	A	B	C	D	Accuracy
1310-0005	0-500/0-20"	0.02/0.001"	100	10	12	25	±0.05
1310-0006	0-500/0-20"	0.02/0.001"	150	10	12	32	±0.05
1310-0010	0-600/0-24"	0.02/0.001"	100	10	12	25	±0.05
1310-0011	0-600/0-24"	0.02/0.001"	150	10	12	32	±0.05
1310-0015	0-1000/0-40"	0.02/0.001"	125	20	18	32	±0.07
1310-0016	0-1000/0-40"	0.02/0.001"	200	20	18	32	±0.07
1310-0020	0-1500/0-60"	0.02/0.001"	150	20/30	20	32/41.5	±0.11
1310-0025	0-2000/0-80"	0.02/0.001"	200	20/30	20	52	±0.14

MONOBLOCK VERNIER CALIPER

WITH NIB STYLE&STANDARD JAWS

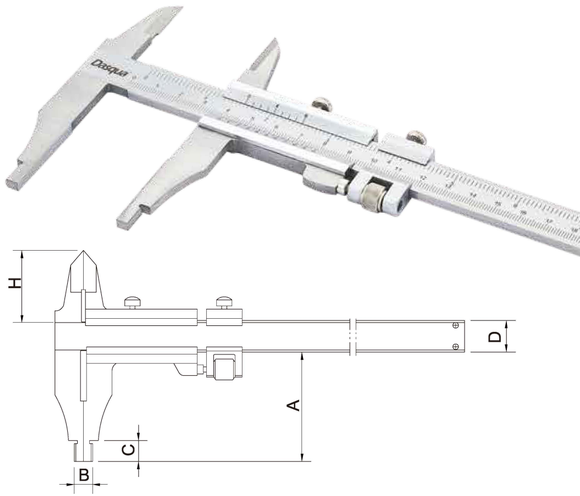

- With fine adjustment
- Hardened ground jaws with precision lapped measuring faces
- Satin chrome finish,hardened stainless steel throughout for longer life
- Distinct lines and figures etched against satin chrome finish

Unit:mm

Code	Range	Graduation	A	B	C	D	H	Accuracy
1305-0001	0-300/0-12"	0.02/0.001"	60	10	10	17	36.5	±0.04
1305-0002	0-500/0-20"	0.02/0.001"	100	10	12	25	55	±0.05
1305-0003	0-600/0-24"	0.02/0.001"	100	10	12	25	55	±0.05
1305-0004	0-1000/0-40"	0.02/0.001"	125	20	18	32	64	±0.07

Made in Europe

DIAL CALIPER PRIME

01 02 03 04 DIN 862 SHOCK-PROOF

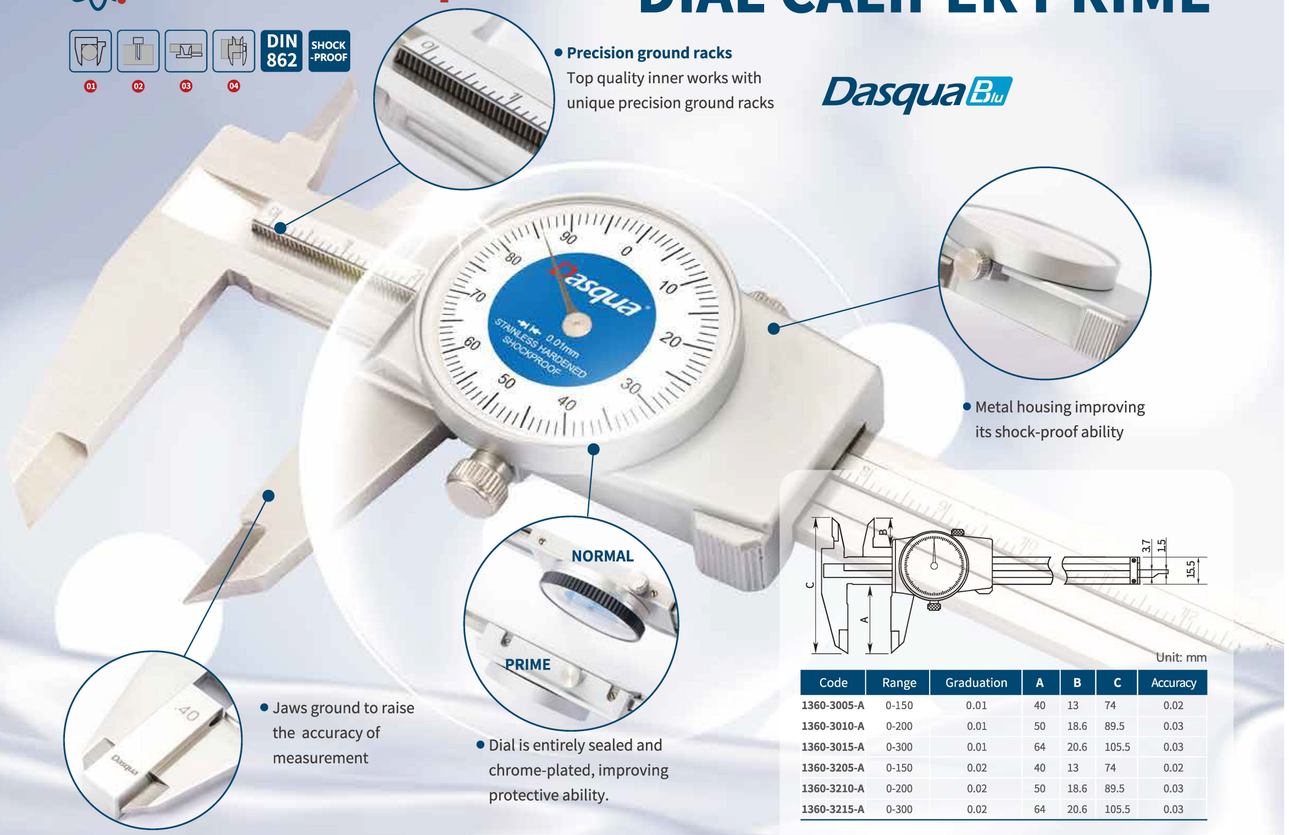

- **Precision ground racks**
  Top quality inner works with unique precision ground racks

- Metal housing improving its shock-proof ability

- Jaws ground to raise the accuracy of measurement

- Dial is entirely sealed and chrome-plated, improving protective ability.

Unit: mm

Code	Range	Graduation	A	B	C	Accuracy
1360-3005-A	0-150	0.01	40	13	74	0.02
1360-3010-A	0-200	0.01	50	18.6	89.5	0.03
1360-3015-A	0-300	0.01	64	20.6	105.5	0.03
1360-3205-A	0-150	0.02	40	13	74	0.02
1360-3210-A	0-200	0.02	50	18.6	89.5	0.03
1360-3215-A	0-300	0.02	64	20.6	105.5	0.03

DIAL CALIPER

DOUBLE SHOCK-PROOF

01 02 03 04 DIN 862 SHOCK-PROOF

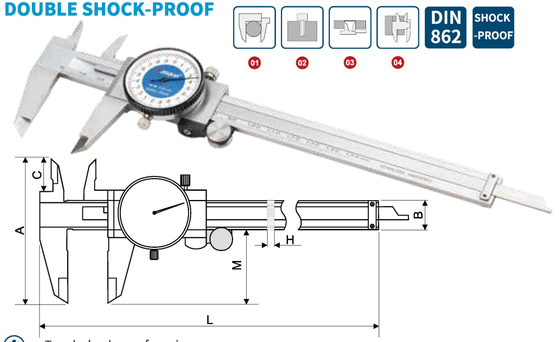

- Tough shock-proof gearing
- 4 usages for measuring outside diameter, inside diameter step and depth
- Made of solid stainless steel
- Strictly made in accordance with DIN862
- Distinct lines and figures laser etched against satin chrome finish
- With locking screw for stable reading
- Large dial for easy and clear reading

Unit:mm

Code	Range	Graduation	L	A	B	C	H	M	Accuracy
1331-2110	0-100	0.02	166.5	62	13.5	13.8	3.3	30	±0.02
1331-2115	0-150	0.02	236	77	16	16.5	3.5	40	±0.03
1331-2120	0-200	0.02	285	88	16	19.5	3.5	48	±0.03
1331-2130	0-300	0.02	410	110	20	22.5	4.0	62	±0.04
1350-5004	0-100	0.01	166.5	62	13.5	13.8	3.3	30	±0.02
1350-5005	0-150	0.01	236	77	16	16.5	3.5	40	±0.03
1350-5010	0-200	0.01	285	88	16	19.5	3.5	48	±0.03
1350-5015	0-300	0.01	410	110	20	22.5	4.0	62	±0.04
1332-4105	0-4"	0.001"	166.5	62	13.5	13.8	3.3	30	±0.001"
1332-4110	0-6"	0.001"	236	77	16	16.5	3.5	40	±0.001"
1332-4115	0-8"	0.001"	285	88	16	19.5	3.5	48	±0.001"
1332-4120	0-12"	0.001"	410	110	20	22.5	4.0	62	±0.0015"

DIAL CALIPER

WITH DUSTPROOF SHIELD

01 02 03 04 DIN 862 SHOCK-PROOF

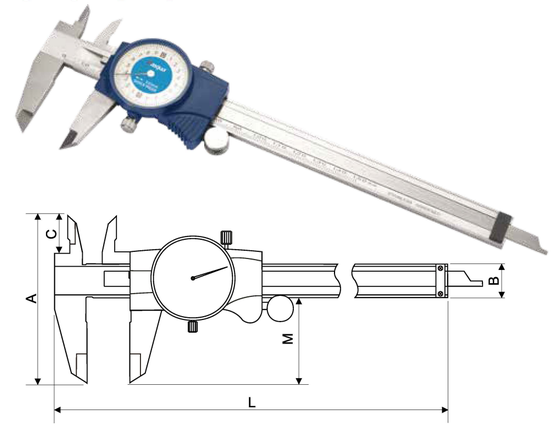

- 4 usages for measuring outside diameter, inside diameter step and depth
- Strictly made in accordance with DIN862
- With locking screw for stable reading
- Large dial for easy and clear reading
- With dustproof shield for easy holding

Unit:mm

Code	Range	Graduation	L	A	B	C	M	Accuracy
1345-0105	0-150	0.02	236	77	16	16.5	40	±0.03
1345-0110	0-200	0.02	285	88	16	19.5	48	±0.03
1345-0115	0-300	0.02	410	110	20	22.5	62	±0.04

HEAVY DUTY DIAL CALIPER



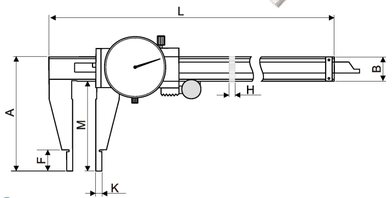



- Tough shock-proof gearing
- 4 usages for measuring outside diameter, inside diameter, step and depth
- Made of solid stainless steel
- Strictly made in accordance with DIN862
- Distinct lines and figures laser etched against satin chrome finish
- With locking screw for stable reading
- Extra rigid beam for high stability

Unit:mm

Code	Range	Graduation	L	A	B	F	H	K	M	Accuracy
1431-2105	0-450	0.02	580	108	22	20	6.0	5	86	±0.05
1431-2110	0-500	0.02	630	108	22	20	6.0	5	86	±0.05
1431-2115	0-600	0.02	730	108	22	20	6.0	5	86	±0.05
1431-2120	0-1000	0.02	1200	168	28	22	8.0	10	140	±0.07
1432-4105	0-18"	0.001"	580	108	22	20	6.0	5	86	±0.002"
1432-4110	0-20"	0.001"	630	108	22	20	6.0	5	86	±0.002"
1432-4115	0-24"	0.001"	730	108	22	20	6.0	5	86	±0.002"
1432-4120	0-40"	0.001"	1200	168	28	22	8.0	10	140	±0.0025"

OIL & WATER PROOF DIGITAL CALIPER

DasquaBlu

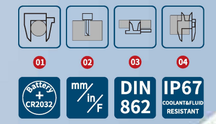



- Not only IP67 against water and dust, but also good oil proof ability



- 20% larger than normal screens; Larger size digital screen for easy reading

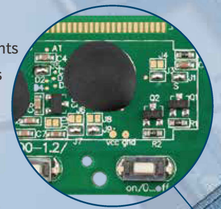

- Electronic components sealed to improve its anti-liquid ability



- Jaws ground to raise the accuracy of measurement

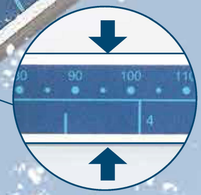

- Surfaces of beam ground (Parallelism less than 0.015, 20% better than normal) to ensure smooth movement throughout

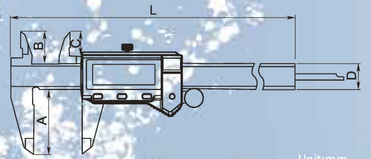

Unit:mm

Code	Range	Resolution	A	B	C	D	L	Accuracy
2015-1005-A	0-150/0-6"	0.01/0.0005"/1/128"	40	20	15.5	16	235	0.02/0.001"
2015-1010-A	0-200/0-8"	0.01/0.0005"/1/128"	50	24	19.5	16	287	0.03/0.0015"
2015-1015-A	0-300/0-12"	0.01/0.0005"/1/128"	60	26	21.5	16	390	0.03/0.0015"

BIG SCREEN DIGITAL CALIPER

01 02 03 04

Battery CR2032 | mm/in/F | DIN 862 | Data output



- Special glass grating adapted

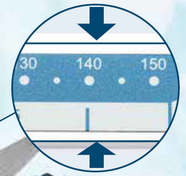

- Surfaces of beam ground (Parallelism:0.015) to ensure smooth movement throughout



- Surfaces of beam ground (Parallelism less than 0.015, 20% better than normal) to ensure smooth movement throughout

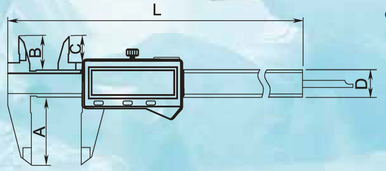

- With fractional function

Unit:mm

Code	Range	Resolution	A	B	C	D	L	Accuracy
1804-1065	0-150/0-6"	0.01/0.0005"/1/128"	40	20	15.5	16	235	0.02/0.001"
1804-1070	0-200/0-8"	0.01/0.0005"/1/128"	50	24	19.5	16	287	0.03/0.0015"
1804-1075	0-300/0-12"	0.01/0.0005"/1/128"	60	26	21.5	16	390	0.03/0.0015"

MINI DIGITAL CALIPER

01 02 03 04

DIN 862 | mm/in | Battery LR44



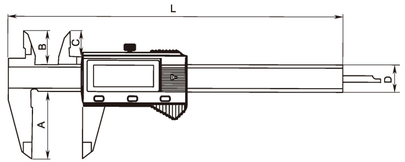

- Mini model for great portability
- Made of solid stainless steel
- Strictly made in accordance with DIN862

Unit:mm

Code	Range	Resolution	A	B	C	D	L	Accuracy
2050-0005	0-100/0-4"	0.01/0.0005"	30	17	12	13	170	0.02/0.001"

DIGITAL CALIPER

WITH CARBIDE-TIPPED JAW

DIN 862 | Battery CR2032 | mm/in | Data output



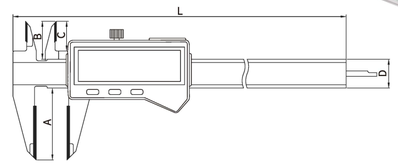

- Used to measure outside diameter, inside diameter, step and depth measurement and also for scribing
- Carbide tipped measuring faces making scribing clear and ensuring abrasive resistance
- Strictly made in accordance with DIN862
- Hardened, ground and lapped measuring surfaces for longer service life
- Measuring surfaces ground for ultimate accuracy and smooth throughout

Unit:mm

Code	Range	Resolution	A	B	C	D	L	Accuracy
2406-1005	0-150/0-6"	0.01/0.0005"	40	21	16.5	16	236	±0.03
2406-1010	0-200/0-8"	0.01/0.0005"	50	24	19.5	16	286	±0.03
2406-1015	0-300/0-12"	0.01/0.0005"	60	26	21.5	16	400	±0.04

METAL HOUSING DIGITAL CALIPER



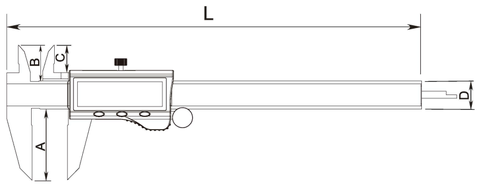



- With sturdy metal housing for high stability
- Made of solid stainless steel
- Stricly made in accordance with DIN862
- Hardened, ground and lapped measuring surfaces for longer service life

Unit:mm

Code	Range	Resolution	A	B	C	D	L	Accuracy
2115-2305	0-150/0-6"	0.01/0.0005"	40	20	15.5	16	235	0.02/0.001"
2115-2310	0-200/0-8"	0.01/0.0005"	50	24	19.5	16	287	0.03/0.0015"
2115-2315	0-300/0-12"	0.01/0.0005"	60	26	21.5	16	390	0.03/0.0015"

IP54 WATER PROOF DIGITAL CALIPER

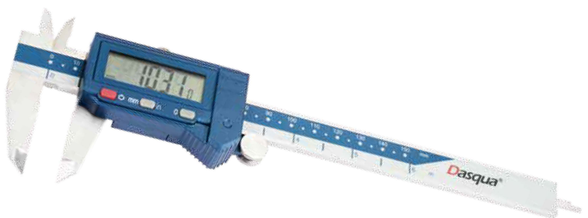

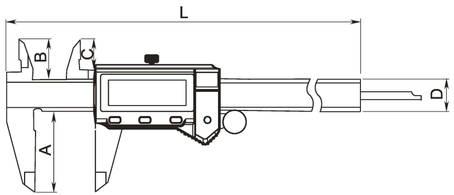

- With calibration certificate
- Made of solid stainless steel
- Strictly made in accordance with DIN862
- IP54 protection against liquid
- Hardened, ground and lapped measuring surfaces for longer service life

Unit:mm

Code	Range	Resolution	A	B	C	D	L	Accuracy
2000-1005	0-150/0-6"	0.01/0.0005"/1/128"	40	20	15.5	16	235	0.02/0.001"
2000-1010	0-200/0-8"	0.01/0.0005"/1/128"	50	24	19.5	16	287	0.03/0.0015"
2000-1015	0-300/0-12"	0.01/0.0005"/1/128"	60	26	21.5	16	390	0.03/0.0015"

WITH ABSOLUTE FUNCTION

Unit:mm

Code	Range	Resolution	A	B	C	D	L	Accuracy
2010-1005	0-150/0-6"	0.01/0.0005"/1/128"	40	20	15.5	16	235	0.02/0.001"
2010-1010	0-200/0-8"	0.01/0.0005"/1/128"	50	24	19.5	16	287	0.03/0.0015"
2010-1015	0-300/0-12"	0.01/0.0005"/1/128"	60	26	21.5	16	390	0.03/0.0015"

WITH 0.005MM RESOLUTION

Unit:mm

Code	Range	Resolution	A	B	C	D	L	Accuracy
2005-1005	0-150/0-6"	0.005/0.0005"	40	20	15.5	16	235	0.02/0.001"
2005-1010	0-200/0-8"	0.005/0.0005"	50	24	19.5	16	287	0.03/0.0015"
2005-1015	0-300/0-12"	0.005/0.0005"	60	26	21.5	16	390	0.03/0.0015"

WITH WIRELESS SYSTEM

Unit:mm

Code	Range	Resolution	A	B	C	D	L	Accuracy
2025-1005	0-150/0-6"	0.01/0.0005"/1/128"	40	20	15.5	16	235	0.02/0.001"
2025-1010	0-200/0-8"	0.01/0.0005"/1/128"	50	24	19.5	16	287	0.03/0.0015"
2025-1015	0-300/0-12"	0.01/0.0005"/1/128"	60	26	21.5	16	390	0.03/0.0015"

IP67 WATER PROOF DIGITAL CALIPER



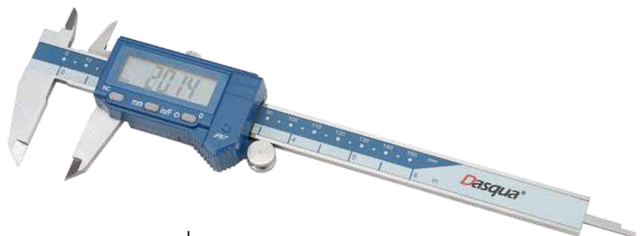

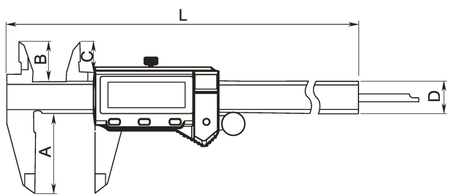

- With calibration certificate
- Made of solid stainless steel
- Strictly made in accordance with DIN862
- With inductive measurement system
- Large easy-to-read LCD screen
- Glass grating adapted
- IP67 protection against liquid

Unit:mm

Code	Range	Resolution	A	B	C	D	L	Accuracy
2015-1005	0-150/0-6"	0.01/0.005"/1/128"	40	20	15.5	16	235	0.02/0.001"
2015-1010	0-200/0-8"	0.01/0.005"/1/128"	50	24	19.5	16	287	0.03/0.0015"
2015-1015	0-300/0-12"	0.01/0.005"/1/128"	60	26	21.5	16	390	0.03/0.0015"

WITH OIL PROOF ABILITY

Unit:mm

Code	Range	Resolution	A	B	C	D	L	Accuracy
2015-2405	0-150/0-6"	0.01/0.005"/1/128"	40	20	15.5	16	235	0.02/0.001"
2015-2410	0-200/0-8"	0.01/0.005"/1/128"	50	24	19.5	16	287	0.03/0.0015"
2015-2415	0-300/0-12"	0.01/0.005"/1/128"	60	26	21.5	16	390	0.03/0.0015"

WITH WIRELESS SYSTEM

Unit:mm

Code	Range	Resolution	A	B	C	D	L	Accuracy
2020-1005	0-150/0-6"	0.01/0.005"/1/128"	40	20	15.5	16	235	0.02/0.001"
2020-1010	0-200/0-8"	0.01/0.005"/1/128"	50	24	19.5	16	287	0.03/0.0015"
2020-1015	0-300/0-12"	0.01/0.005"/1/128"	60	26	21.5	16	390	0.03/0.0015"

IP54 WATER PROOF HEAVY DUTY DIGITAL CALIPER



EUROPEAN STYLE

Unit:mm

Code	Range	Resolution	L	A	B	W	T	Accuracy
2220-8105	0-300/0-12"	0.01/0.0005"	445	40	90	20	10	0.04/0.002"
2220-8110	0-500/0-20"	0.01/0.0005"	670	52	150	24	20	0.05/0.002"
2220-8115	0-1000/0-40"	0.01/0.0005"	1210	60	150	30	20	0.06/0.0025"

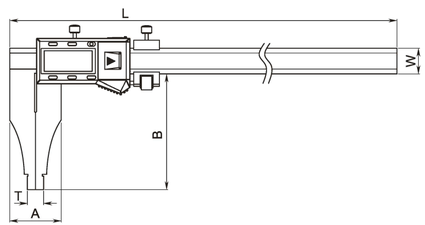

- With sturdy frame and big size for high stability
- Made of solid stainless steel
- Strictly made in accordance with DIN862
- With fine adjustment
- With Data-Output and Metric-Inch-Fraction Conversion function

AMERICAN STYLE

Unit:mm

Code	Range	Resolution	L	A	B	W	T	Accuracy
2220-8113	0-300/0-12"	0.01/0.0005"	445	40	90	20	10(0.5")	0.04/0.002"
2220-8116	0-600/0-24"	0.01/0.0005"	770	44	100	24	20(0.8")	0.05/0.002"
2220-8119	0-1000/0-40"	0.01/0.0005"	1210	46	125	30	20(0.8")	0.06/0.0025"

WITH LARGE RANGE

Unit:mm

Code	Range	Resolution	L	A	B	W	T	Accuracy
2220-3575	0-1500/0-60"	0.01/0.0005"	1800	80	125	41.5/52	20	0.11/0.0045"
2220-3580	0-2000/0-80"	0.01/0.0005"	2300	80	150	41.5/52	20	0.14/0.0055"



IP54 WATER PROOF
HEAVY DUTY DIGITAL CALIPER

WITH UPPER JAWS

DIN 862 | BATTERY + CR2032 | mm / in | Data output | IP54 COOLANT&FLUID RESISTANT | 01 | 02 | 03

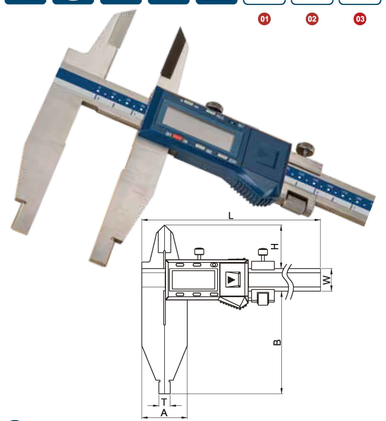

- With sturdy frame and big size for high stability
- Made of solid stainless steel
- Strictly made in accordance with DIN862
- With fine adjustment
- With Data-Output and Metric-Inch-Fraction Conversion function

Unit:mm

Code	Range	Resolution	L	A	B	W	T	H	Accuracy
2710-1105	0-300/0-12"	0.01/0.0005"	445	40	90	20	10	38	0.04/0.002"
2710-1110	0-500/0-20"	0.01/0.0005"	670	52	150	24	20	60	0.05/0.002"
2710-1113	0-600/0-24"	0.01/0.0005"	770	54	150	24	20	60	0.05/0.002"
2710-1115	0-1000/0-40"	0.01/0.0005"	1210	60	150	30	20	63	0.06/0.0025"

IP65 WATER PROOF
ULTRA-LIGHT GIANT CALIPER

MADE OF CARBON FIBER & WITH WIRELESS SYSTEM

01 | 02 | WIRELESS TRANSMITTER | BATTERY + CR2032 | DIN 862 | mm / in | IP65 COOLANT&FLUID RESISTANT | Data output

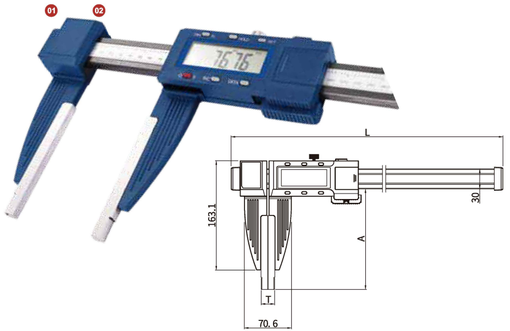

- Lightweight digital calipers employing Carbon Fiber Reinforced Plastics in the beam and jaws
- Non-conductive and especially made for the electronic and sensitive purposes
- Made of carbon fiber, guaranteeing lower weight and portability
- Made of carbon fiber, the results rarely affected by temperature
- With Inductive measurement system
- IP65 protection against water
- With data output and wireless transmission function

Unit:mm

Code	Range	Resolution	A	T	L	Accuracy
2810-0003	0-600/0-24"	0.01/0.0005"	100	20(0.8")	770	0.05/0.002"
2810-0004	0-800/0-32"	0.01/0.0005"	150	20(0.8")	970	0.06/0.0025"
2810-0005	0-1000/0-40"	0.01/0.0005"	150	20(0.8")	1226	0.06/0.0025"
2810-0010	0-1500/0-60"	0.01/0.0005"	200	20(0.8")	1736	0.09/0.0035"
2810-0015	0-2000/0-80"	0.01/0.0005"	300	20(0.8")	2246	0.012/0.005"

IP65 WATER PROOF
HEAVY DUTY DIGITAL CALIPER

EUROPEAN STYLE

01 | 02 | WIRELESS TRANSMITTER | BATTERY + CR2032 | DIN 862 | mm / in | IP65 COOLANT&FLUID RESISTANT | Data output

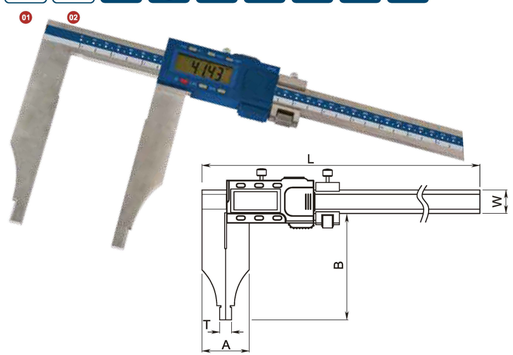

- With sturdy frame and big size for high stability
- Made of solid stainless steel
- Strictly made in accordance with DIN862
- With fine adjustment
- With Data-Output and Metric-Inch-Fraction Conversion function
- IP65 protection against liquid
- Product built-in wireless system is optional (Code: 2510-3115)

Unit:mm

Code	Range	Resolution	L	A	B	W	T	Accuracy
2320-1105	0-300/0-12"	0.01/0.0005"	445	40	90	20	10	0.03/0.0015"
2320-1106	0-500/0-20"	0.01/0.0005"	670	52	150	24	20	0.05/0.002"
2320-1110	0-600/0-24"	0.01/0.0005"	770	44	100	24	20	0.05/0.002"
2320-1115	0-1000/0-40"	0.01/0.0005"	1210	60	150	30	20	0.06/0.0025"
2510-3115	0-1000/0-40"	0.01/0.0005"	1210	60	150	30	20	0.06/0.0025"

IP67 WATER PROOF
DIGITAL SCALE

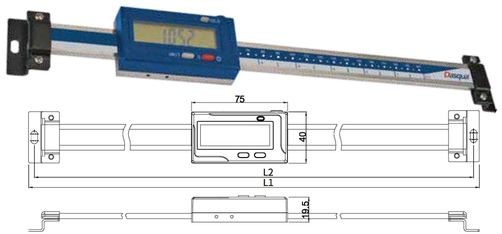

- Used for improving the old-style machines
- Made of solid stainless steel, widened and thickened
- IP67 protection against liquid
- Super large LCD screen for easy reading
- With Hold and Metric-Inch-Fraction Conversion function, no need to set the reference point at every power-on

Unit:mm

Code	Range	Resolution	L1	L2	Accuracy
5810-3105	0-150/0-6"	0.01/0.0005"	286	277	0.02/0.001"
5810-3110	0-200/0-8"	0.01/0.0005"	326	317	0.03/0.0015"
5810-3115	0-300/0-12"	0.01/0.0005"	426	417	0.03/0.0015"
5810-3120	0-600/0-24"	0.01/0.0005"	746	737	0.05/0.005"
5810-3125	0-1000/0-40"	0.01/0.0005"	1146	1137	0.05/0.0025"

WITH WIRELESS SYSTEM

Unit:mm

Code	Range	Resolution	L1	L2	Accuracy
5810-7105	0-150/0-6"	0.01/0.0005"	286	277	0.02/0.001"
5810-7110	0-200/0-8"	0.01/0.0005"	326	317	0.03/0.0015"
5810-7115	0-300/0-12"	0.01/0.0005"	426	417	0.03/0.0015"
5810-7120	0-600/0-24"	0.01/0.0005"	746	737	0.05/0.005"
5810-7125	0-1000/0-40"	0.01/0.0005"	1146	1137	0.05/0.0025"

IP54 WATER PROOF DIGITAL SCALE

WITH SEPARATE READOUT



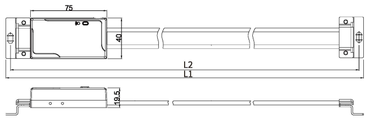

- Used for improving the old-style machine
- Made of solid stainless steel, widened and thickened
- IP54 protection against liquid
- Super large separate LCD screen for easy and clear reading
- With Hold, Metric-Inch-Fraction Conversion and Absolute function, no need to set the reference point at every power-on

Unit:mm

Code	Range	Resolution	L1	L2	Accuracy
5810-4405	0-150/0-6"	0.01/0.0005"	286	277	0.02/0.001"
5810-4410	0-200/0-8"	0.01/0.0005"	326	317	0.03/0.0015"
5810-4415	0-300/0-12"	0.01/0.0005"	426	417	0.03/0.0015"
5810-4420	0-600/0-24"	0.01/0.0005"	746	737	0.05/0.002"
5810-4425	0-1000/0-40"	0.01/0.0005"	1146	1137	0.06/0.0025"

IP67 WATER PROOF DIGITAL SCALE

WITH SEPARATE READOUT



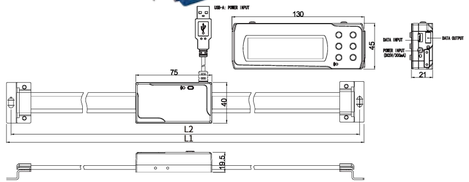

- Used for improving the old-style machine
- Made of solid stainless steel, widened and thickened
- IP67 protection against liquid
- Super large separate LCD screen for easy and clear reading
- With Hold, Metric-Inch-Fraction Conversion and Absolute function, no need to set the reference point at every power-on

Unit:mm

Code	Range	Resolution	L1	L2	Accuracy
5810-1105	0-150/0-6"	0.01/0.0005"	286	277	0.02/0.001"
5810-1110	0-200/0-8"	0.01/0.0005"	326	317	0.03/0.0015"
5810-1115	0-300/0-12"	0.01/0.0005"	426	417	0.03/0.0015"
5810-1120	0-600/0-24"	0.01/0.0005"	746	737	0.05/0.002"
5810-1125	0-1000/0-40"	0.01/0.0005"	1146	1137	0.06/0.0025"

MONOBLOCK DEPTH VERNIER GAUGE

DIN 862

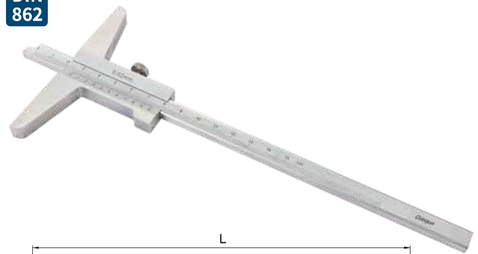

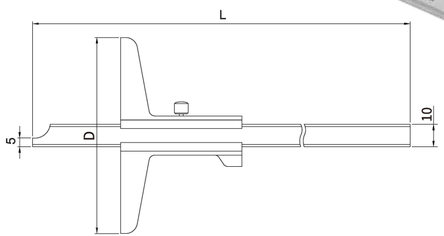

- Hardened ground jaws with precision lapped measuring faces
- Satin chrome finish,hardened stainless steel throughout for longer life
- Distinct lines and figures etched against satin chrome finish

Unit:mm

Code	Range	Graduation	L	D	Accuracy
3001-1901-A	0-150	0.02	250	100	±0.03
3001-1903-A	0-200	0.02	300	100	±0.03
3001-1905-A	0-300	0.02	400	100	±0.04
3001-2901-A	0-6"	0.0001"	250	100	±0.03
3001-2903-A	0-8"	0.0001"	300	100	±0.03
3001-2905-A	0-12"	0.0001"	400	100	±0.04

DIGITAL DEPTH CALIPER

WITH ABSOLUTE FUNCTION

BATTERY CR2032 | DIN 862 | mm / in | IP54 COOLANT&FLUID RESISTANT | Absolute

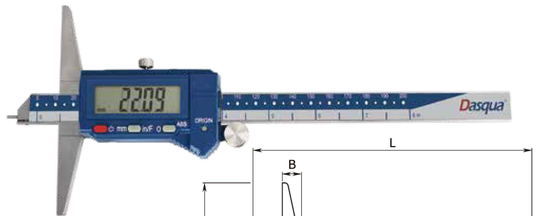

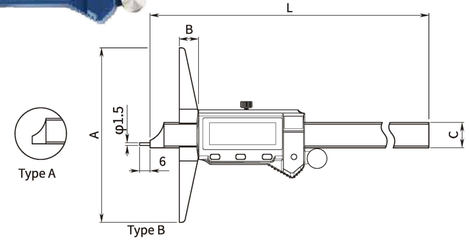

- Used to measure step and depth
- Made of solid stainless steel
- Strictly made in accordance with DIN862
- IP54 protection against liquid
- Hardened, ground and lapped measuring surfaces for longer service life
- With Absolute-Reference System and no need to set the reference point at every power-on

Unit:mm

Code	Range	Resolution	A	B	C	L	Style	Accuracy
2230-8105	0-150/0-6"	0.01/0.0005"	100	11	14.5	232.5	Type A	0.03/0.0015"
2230-8115	0-200/0-8"	0.01/0.0005"	100	11	14.5	285	Type A	0.03/0.0015"
2230-8125	0-300/0-12"	0.01/0.0005"	150	13.5	14.5	390	Type A	0.04/0.0015"
2250-2105	0-150/0-6"	0.01/0.0005"	100	11	14.5	232.5	Type B	0.03/0.0015"
2250-2110	0-200/0-8"	0.01/0.0005"	100	11	14.5	285	Type B	0.03/0.0015"
2250-2115	0-300/0-12"	0.01/0.0005"	150	13.5	14.5	390	Type B	0.04/0.0015"

DIGITAL DEPTH CALIPER

WITH BAR

Battery CR2032 | DIN 862 | mm/in | Data output

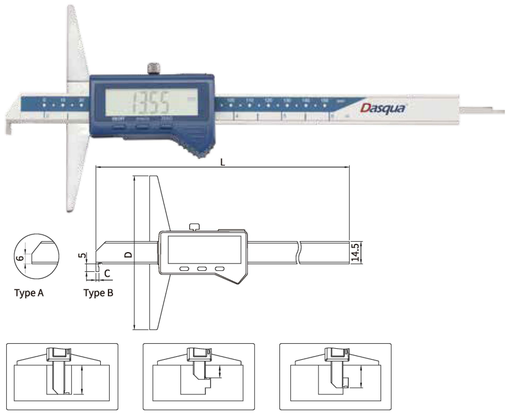

- Used to measure step and depth
- Made of solid stainless steel, widened and thickened
- Strictly made in accordance with DIN862
- Hardened, ground and lapped measuring surfaces for longer service life

Unit:mm

Code	Range	Resolution	A	C	L	Style	Accuracy
2001-2005	0-150/0-6"	0.01/0.0005"	100	/	230	Type A	±0.03
2001-2010	0-200/0-8"	0.01/0.0005"	100	/	280	Type A	±0.03
2001-2015	0-300/0-12"	0.01/0.0005"	100	/	380	Type A	±0.04
2001-1005	0-150/0-6"	0.01/0.0005"	100	2	230	Type B	±0.03
2001-1010	0-200/0-8"	0.01/0.0005"	100	2	280	Type B	±0.03
2001-1015	0-300/0-12"	0.01/0.0005"	100	2	380	Type B	±0.04

IP67 WATER PROOF DIGITAL DEPTH CALIPER

Battery CR2032 | DIN 862 | mm/in | IP67 COOLANT&FLUID RESISTANT | wireless

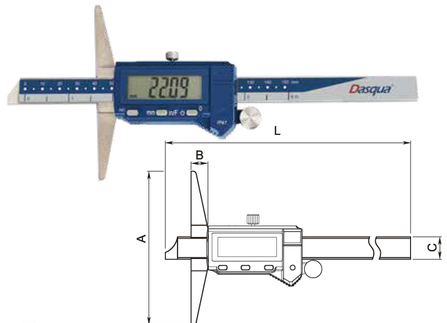

- Used to measure step and depth
- Made of solid stainless steel
- Strictly made in accordance with DIN862
- IP67 protection against liquid
- Hardened, ground and lapped measuring surfaces for longer service life

Unit:mm

Code	Range	Resolution	A	B	C	L	Accuracy
2330-1105	0-150/0-6"	0.01/0.0005"	100	11	14.5	232.5	0.03/0.0015"
2330-1110	0-200/0-8"	0.01/0.0005"	100	11	14.5	285	0.03/0.0015"
2330-1115	0-300/0-12"	0.01/0.0005"	150	13.5	14.5	390	0.04/0.0015"

WITH WIRELESS SYSTEM

Unit:mm

Code	Range	Resolution	A	B	C	L	Accuracy
2330-3105	0-150/0-6"	0.01/0.0005"	100	11	14.5	232.5	0.03/0.0015"
2330-3110	0-200/0-8"	0.01/0.0005"	100	11	14.5	285	0.03/0.0015"
2330-3115	0-300/0-12"	0.01/0.0005"	150	13.5	14.5	390	0.04/0.0015"

MARKING GAUGE

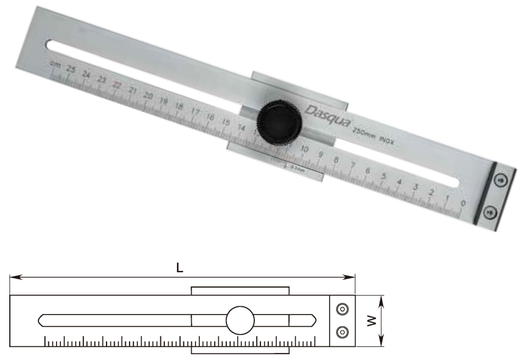

- Perfect tool for engineers, craft persons, model makers for a variety of marking out jobs
- Made of high quality steel
- Stress-relieved and precision ground in pairs
- Distinct lines and figures laser etched on beam

Unit:mm

Code	Range	Graduation	Accuracy	L	W
9241-3105	0-200	0.1	±0.1	250	40
9241-3110	0-250	0.1	±0.1	300	40
9241-3115	0-300	0.1	±0.1	350	40

SCRIBING CALIPER

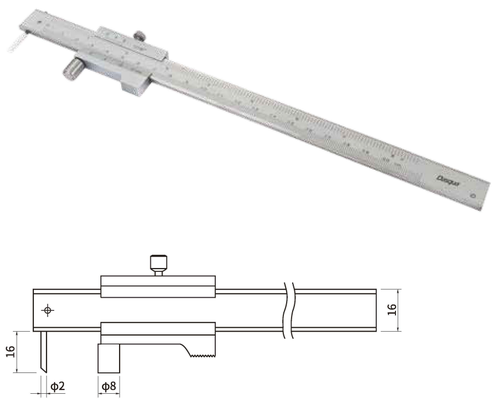

- Distinct lines and figures laser etched on beam
- Used to measure outside diameter, inside diameter, step, depth measurement and also for scribing
- Made of high quality stainless steel
- Carbide tipped measuring faces making scribing clear

Unit:mm

Code	Range	Graduation	Accuracy
2805-0005	0-200/0-8"	0.1/1/128"	±0.1

DIGITAL TUBE THICKNESS CALIPER

DIN 862 | BATTERY + CR2032 | mm/in/F | IP54 COOLANT&FLUID RESISTANT

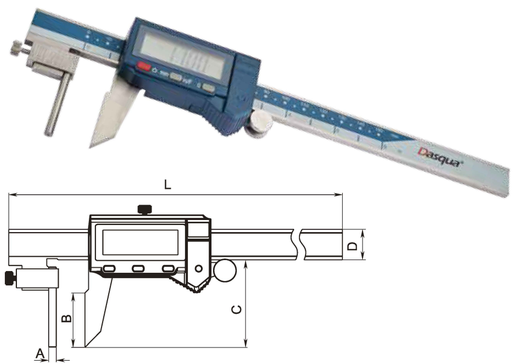

- Used to measure tube thickness
- Made of solid stainless steel
- Strictly made in accordance with DIN862
- IP54 protection against liquid
- Hardened, ground and lapped measuring surfaces for longer service life
- Measuring surfaces ground for ultimate accuracy and smooth movement throughout

Unit:mm

Code	Range	Resolution	A	B	C	D	L	Accuracy
2060-1105	0-150/0-6"	0.01/0.0005"/ 1/128"	Φ4	28.5	46	16	250	0.03/0.0015"
2060-1110	0-200/0-8"	0.01/0.0005"/ 1/128"	Φ4	32.5	50	16	300	0.03/0.0015"
2060-1115	0-300/0-12"	0.01/0.0005"/ 1/128"	Φ4	48.5	66	16	400	0.04/0.0015"

DIGITAL OUTSIDE NECK CALIPER

DIN 862 | BATTERY + CR2032 | mm/in/F | IP54 COOLANT&FLUID RESISTANT

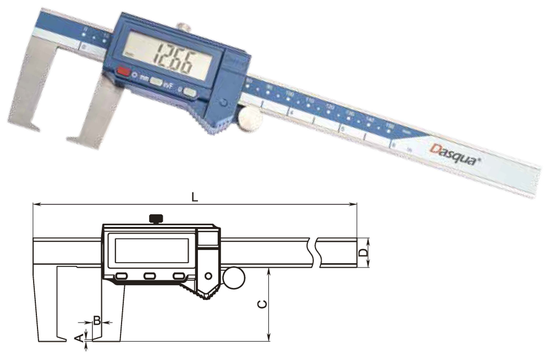

- Used to measure outside grooves
- Made of solid stainless steel
- Strictly made in accordance with DIN862
- IP54 protection against liquid
- Hardened, ground and lapped measuring surfaces for longer service life
- Measuring surfaces ground for ultimate accuracy and smooth movement throughout

Unit:mm

Code	Range	Resolution	A	B	C	D	L	Accuracy
2065-1105	0-150/0-6"	0.01/0.0005"/ 1/128"	1	5	40	16	250	0.03/0.0015"
2065-1110	0-200/0-8"	0.01/0.0005"/ 1/128"	1	7	50	16	300	0.03/0.0015"
2065-1115	0-300/0-12"	0.01/0.0005"/ 1/128"	1.5	8	60	16	405	0.04/0.0015"

DIGITAL INSIDE GROOVE MEASURING CALIPER

DIN 862 | BATTERY + CR2032 | mm/in | IP67 COOLANT&FLUID RESISTANT

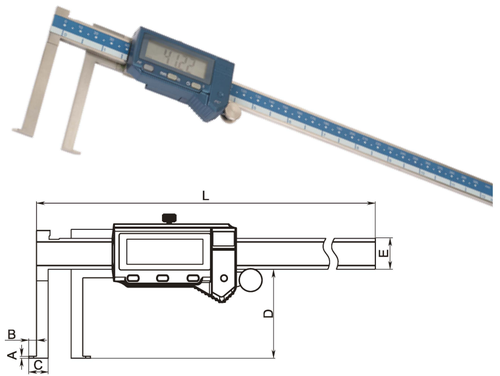

- Used to measure inside grooves
- Made of solid stainless steel
- Strictly made in accordance with DIN862
- IP67 protection against liquid
- Hardened, ground and lapped measuring surfaces for longer service life
- Measuring surfaces ground for ultimate accuracy and smooth movement throughout

Unit:mm

Code	Range	Resolution	A	B	C	D	E	L	Accuracy
2570-5105	10-150/0.39-6"	0.01/0.0005"	1	4	10	46	16	235	0.03/0.0015"
2570-5110	11-200/0.43-8"	0.01/0.0005"	1	5	11	56	16	287	0.03/0.0015"
2570-5115	12-300/0.47-12"	0.01/0.0005"	1.5	5	12	66	16	390	0.04/0.0015"

DIGITAL INSIDE NECK CALIPER

DIN 862 | BATTERY + CR2032 | mm/in | IP67 COOLANT&FLUID RESISTANT

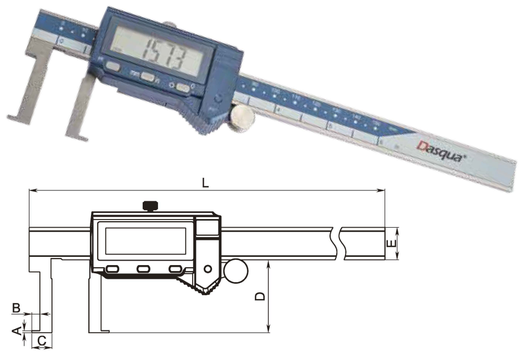

- Used to measure inside grooves
- Made of solid stainless steel
- Strictly made in accordance with DIN862
- IP67 protection against liquid
- Hardened, ground and lapped measuring surfaces for longer service life
- Measuring surfaces ground for ultimate accuracy and smooth movement throughout

Unit:mm

Code	Range	Resolution	A	B	C	D	E	L	Accuracy
2580-5105	20-150/0.787-6"	0.01/0.0005"	1	4	10	36	16	235	0.03/0.0015"
2580-5110	25-200/0.984-8"	0.01/0.0005"	1	5	12.5	46	16	287	0.03/0.0015"
2580-5115	30-300/1.181-12"	0.01/0.0005"	1.5	5	15	56	16	390	0.04/0.0015"

DIGITAL POINT CALIPER

DIN 862 | BATTERY + CR2032 | mm/in/F | IP54 COOLANT&FLUID RESISTANT

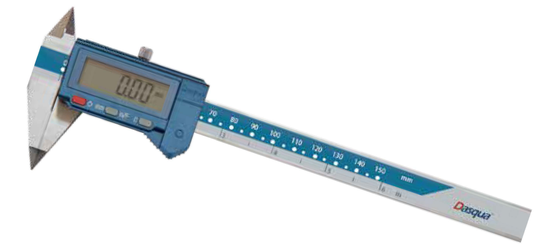

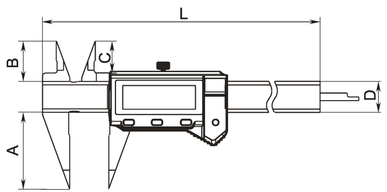

- The narrow pointed jaws fit into very small grooves and tracks, making many previously difficult outside measurements far easier to obtain
- Strictly made in accordance with DIN862
- With depth bar

Unit:mm

Code	Range	Resolution	A	B	C	D	L	Accuracy
2090-0010	0-150/0-6"	0.01/0.0005"/1/128"	40	20	15.4	16	235	0.03/0.0015"

DIGITAL CENTERLINE & APOTHEM CALIPER

BATTERY + CR2032 | mm/in | IP67 COOLANT&FLUID RESISTANT



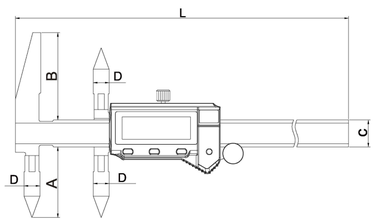

- Specially designed to measure distances between centers on the same and offset planes
- Can preset the size of measuring anvil

Unit:mm

Code	Apothem Range	Centerline Range	Resolution	A	B	C	D	L	Accuracy
2130-1005	5-300	10-300	0.01/0.0005"	44.5	55	17	φ10	410	±0.08
2130-1010	10-500	20-500	0.01/0.0005"	40	50	24	φ20	690	±0.09

DIGITAL CENTERLINE CALIPER

BATTERY + CR2032 | mm/in | IP67 COOLANT&FLUID RESISTANT

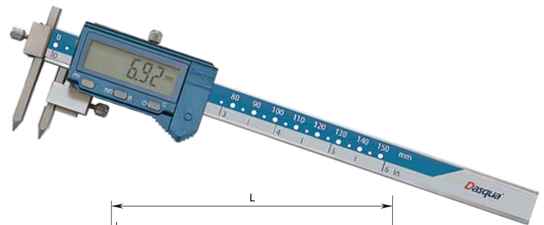

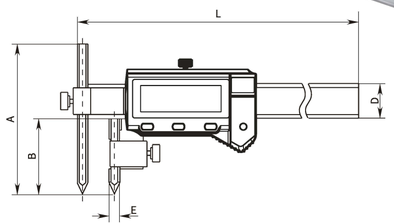

- Used to measure the center distance between two holes
- Can preset the size of measuring anvil
- The conical points can be adjusted up or down to measure the center distance between two holes on different heights.
- Hardened, ground and lapped measuring surfaces for longer service life
- Measuring surfaces ground for ultimate accuracy and smooth throughout
- Made of high quality stainless steel

Unit:mm

Code	Range	Resolution	A	B	D	E	L	Accuracy
2730-3105	10-150	0.01/0.0005"	65	32	16	φ10	236	±0.05
2730-3110	10-200	0.01/0.0005"	65	32	16	φ10	286	±0.07
2730-3115	10-300	0.01/0.0005"	65	32	16	φ10	396	±0.09

DIGITAL TOOTH-THICKNESS CALIPER

BATTERY + CR2032 | mm/in/F | IP54 COOLANT&FLUID RESISTANT

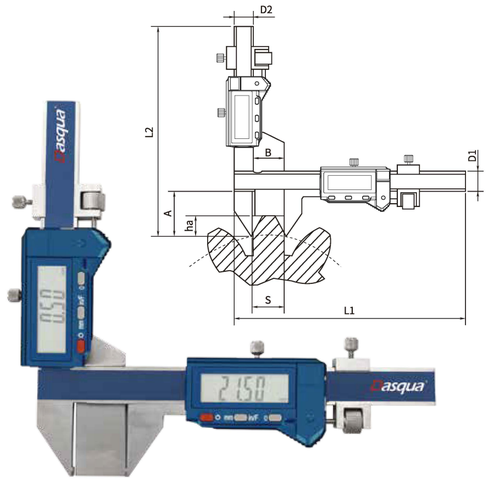

- Used for measuring gear thickness
- Made of high quality stainless steel
- LCD display with clear reading
- With fixing screw and fine adjustment on both sides
- Zero setting at any position

Unit:mm

Code	Range	Resolution	L1	L2	A	B	D1	D2	Accuracy
2075-1105	M1-25	0.01/0.0005"/1/128"	170	165	30.5	21	16	16	±0.04
2075-1110	M5-50	0.01/0.0005"/1/128"	220	190	55	50.5	16	16	±0.04

DIGITAL DISK-BRAKE CALIPER

Battery CR2032 | mm/in/F | IP54 COOLANT&FLUID RESISTANT



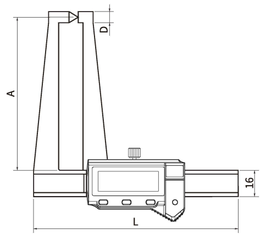

- Fast and easy measurement of the brake disc thickness
- Made of high quality stainless steel
- LCD display with clear reading
- Zero setting at any position, mm/inch conversion at any position

Unit:mm

Code	Range	Resolution	A	D	L	Accuracy
2240-0005	0-125/0-5"	0.01/0.0005"/1/128"	93	6	230	±0.05

DIGITAL ARC-RADIUS CALIPER

Battery CR2032 | mm/in/F | IP54 COOLANT&FLUID RESISTANT



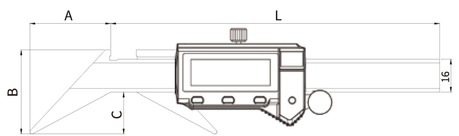

- Used to measure non-full-round arc
- Made of solid stainless steel
- IP54 protection against liquid
- Hardened, ground and lapped measuring surfaces for longer service life
- Measuring surfaces ground for ultimate accuracy and smooth movement throughout

Unit:mm

Code	Range	Resolution	A	B	C	L	Accuracy
2240-4005	3-150	0.01/0.0005"/1/128"	39.3	40.8	20.3	160	±0.1
2240-4010	3-300	0.01/0.0005"/1/128"	76.8	60.8	40.3	242	±0.2

DIGITAL INSIDE GROOVE MEASURING CALIPER

Battery CR2032 | mm/in | IP67 COOLANT&FLUID RESISTANT

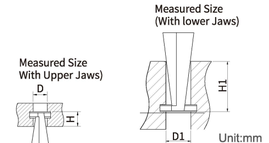

Unit:mm

D	H
φ10	<15
φ11~φ150	<30

D1	H1	D1	H1
φ15	<10	φ19	<42
φ16	<18	φ21	<58
φ18	<34	φ22~φ150	<70

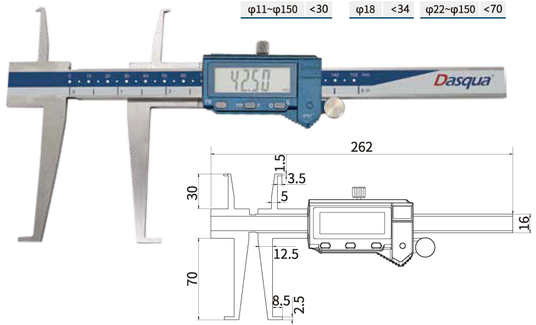

- Used for measuring diameter of grooves inside bores
- Automatic power off
- Made of high quality stainless steel

Unit:mm

Code	Range of upper jaw	Range of lower jaw	Resolution	Accuracy
2240-0025	10-150/0.39-6"	15-150/0.59-6"	0.01/0.0005"	±0.04
2240-0026	10-200/0.39-8"	15-200/0.59-8"	0.01/0.0005"	±0.04
2240-0027	10-300/0.39-12"	15-300/0.59-12"	0.01/0.0005"	±0.05

DIGITAL DEPTH GAUGE

WITH ROUND DEPTH BAR

Battery CR2032 | mm/in/F | IP54 COOLANT&FLUID RESISTANT

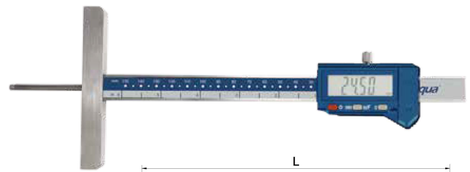

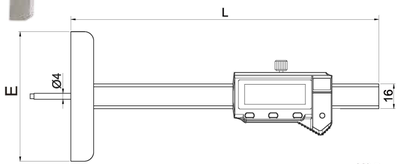

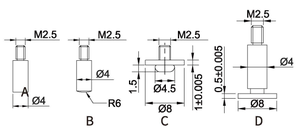

Remark:4 types of contact points optional

- Specially designed for narrow bore depth
- With thin and long depth measuring bar
- Pointed contact, flat contact or spherical contact is optional.
- Made of high quality stainless steel
- Zero setting at any position

Unit:mm

Code	Range	Resolution	L	E	Accuracy
2730-0010	0-100/0-4"	0.01/0.0005"/1/128"	200	85	±0.02
2730-0015	0-120/0-4.7"	0.01/0.0005"/1/128"	300	101	±0.03
2730-0020	0-200/0-8"	0.01/0.0005"/1/128"	300	101	±0.03
2730-0025	0-300/0-12"	0.01/0.0005"/1/128"	400	101	±0.04

MINI DIGITAL DEPTH GAUGE

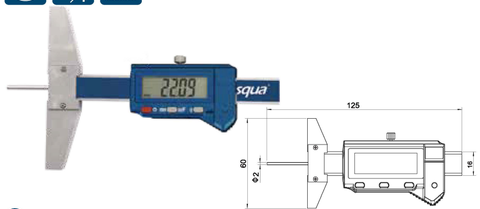

- Used to measure depth of small groove and hole, also to measure depth of tire
- With thin and long depth measuring bar
- Zero setting at any position
- Made of high quality stainless steel

Unit:mm

Code	Range	Resolution	Accuracy
2240-0030	0-30/0-1.2"	0.01/0.0005"/1/128"	±0.02

DIGITAL STEP & GAP GAUGE

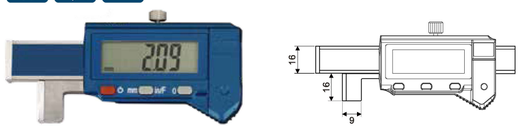

- Used for checking the mutual position of two adjacent surfaces of vehicle
- Can measure the gap between two adjacent surfaces
- Portable and easy to operate

Unit:mm

Code	Range	Resolution	Accuracy
2615-0005	0-12.7	0.01/0.0005"/1/128"	±0.03

DIGITAL STEP & GAP GAUGE

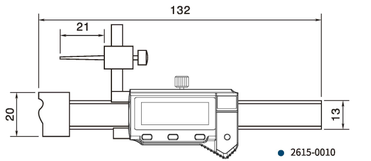

● 2615-0010



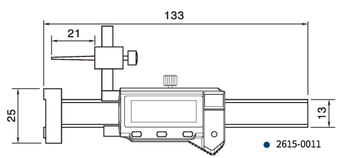

● 2615-0011

- Digital step gauge, also known as high and low gauges
- Used for checking the mutual position of two adjacent surfaces of vehicles
- Zero setting at any position

Unit:mm

Code	Range	Resolution	Accuracy
2615-0010	-10-30	0.01/0.0005"/1/128"	±0.02
2615-0011	-10-30	0.01/0.0005"/1/128"	±0.02

MULTI-FUNCTION DIGITAL CALIPER

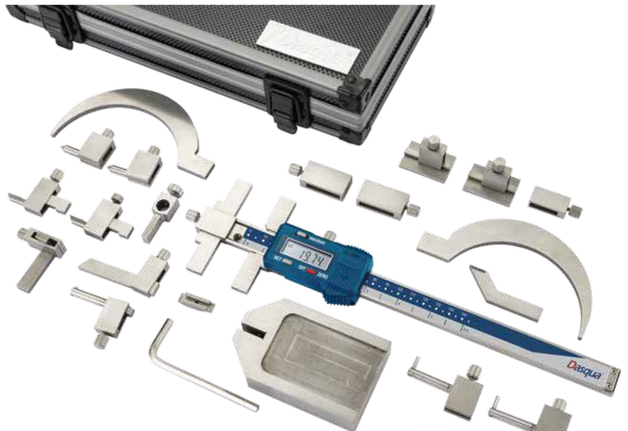

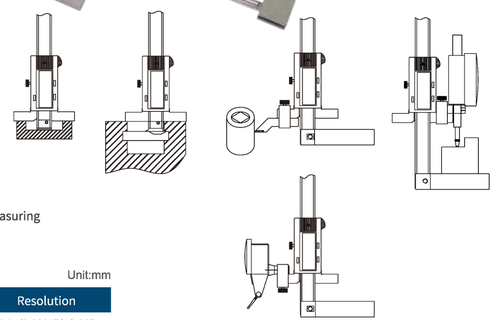

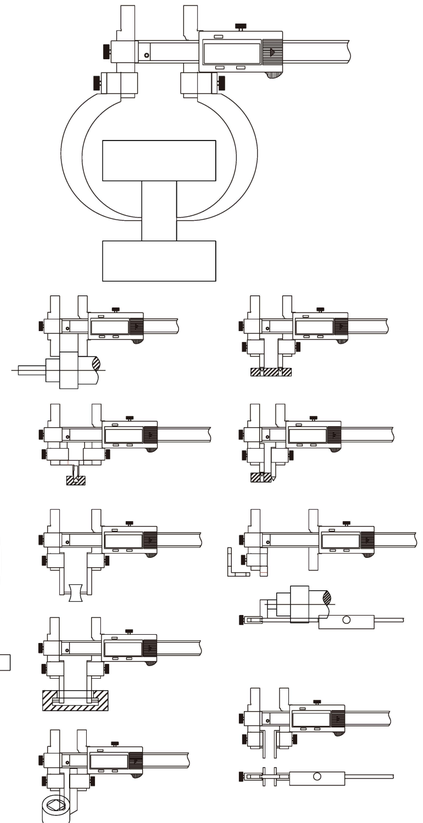

- Used to satisfy users various aims in measuring
- Made of high quality stainless steel
- Zero setting at any position

Unit:mm

Code	Range	Resolution
2615-0015	0-150	0.01/0.0005"/1/128"

BRAKE ROTOR GAUGE WHEEL ON CALIPER

Battery + CR2032 | mm/in/F



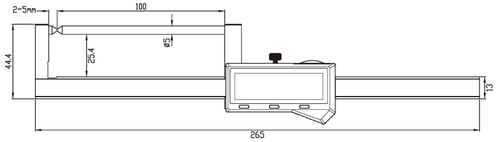

- Used to measure brake rotors without removing the wheel
- Made of solid stainless steel
- Hold function for easy recording of measurement
- Hardened, ground and lapped measuring surfaces for longer service life
- Measuring surfaces ground for ultimate accuracy and smooth movement throughout

Unit:mm

Code	Range	Resolution
1804-1030	0-80/0-3.2"	0.01/0.0005"/1/64"

EASY OUT/INSIDE DIGITAL CALIPER

IP54 COOLANT&FLUID RESISTANT | Data output | Battery + CR2032 | mm/in/F



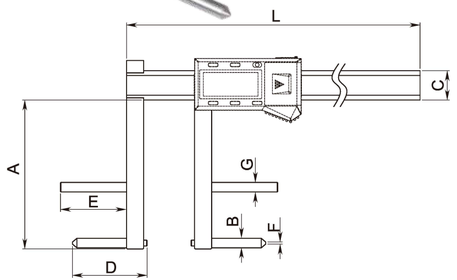

- Used to measure brake drum
- Made of solid stainless steel
- Strictly made in accordance with DIN862
- With Hold and Metric-Inch-Fraction Conversion function
- Hardened, ground and lapped measuring surfaces for longer service life

Unit:mm

Code	Range	Resolution	A	B	C	D	E	F	G	L	Accuracy
2220-8103	100-500/4-20"	0.01/0.0005"/1/64"	101.35	φ6.5	20	50.8	45	φ1.5	φ6.5	520	0.06/0.0025"

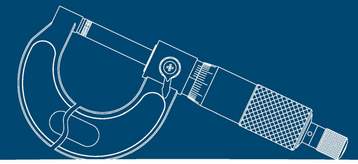

MICROMETER

BORN IN ITALY, RAISED BY THE WORLD

OUTSIDE MICROMETER

WITH STAINLESS STEEL SPINDLE

DIN 863

- Strictly made in accordance with DIN 863
- Spindle thread hardened, ground and lapped for ultimate accuracy
- With spindle lock

- New special carbide used on measuring anvil instead of traditional easy-wear off carbide tip
- Precision Ground STAINLESS STEEL threading rod replacing alloy/carbon steel threading rod mostly used in the industry

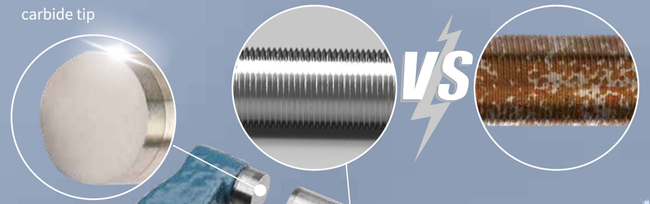

VS

- Clear graduations laser-etched on satin chrome finish for easy reading
- With ratchet stop for constant force(5- 8N 20% better than the normal standard of 5-10N)

Unit:mm

Code	Range	Graduation	A	B	C	L	W	H	Accuracy
4111-8105-A	0-25	0.01	31	29.5	φ6.5	133.8	58.5	φ18	0.004
4111-8110-A	25-50	0.01	56	38	φ6.5	160	76	φ18	0.004
4111-8115-A	50-75	0.01	81	51	φ6.5	185.5	91	φ18	0.005
4111-8120-A	75-100	0.01	106	63.5	φ6.5	210.5	105	φ18	0.005
4111-8125-A	100-125	0.01	131	76	φ6.5	237.3	125	φ18	0.006
4111-8130-A	125-150	0.01	156	89	φ6.5	263.8	142	φ18	0.006
4112-5105-A	0-1"	0.001"	31	29.5	φ6.5	133.8	58.5	φ18	0.00015"
4112-5110-A	1-2"	0.001"	56	38	φ6.5	160	76	φ18	0.00015"
4112-5115-A	2-3"	0.001"	81	51	φ6.5	185.5	91	φ18	0.0002"
4112-5120-A	3-4"	0.001"	106	63.5	φ6.5	210.5	105	φ18	0.0002"
4112-5125-A	4-5"	0.001"	131	76	φ6.5	237.3	125	φ18	0.00025"
4112-5130-A	5-6"	0.001"	156	89	φ6.5	263.8	142	φ18	0.00025"

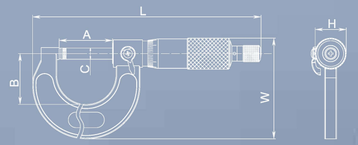

OUTSIDE MICROMETER

WITH 0.001MM GRADUATION

- Stainless steel newly adapted on spindle
- Strictly made in accordance with DIN 863
- With ratchet stop for constant force
- Spindle thread hardened, ground and lapped for ultimate accuracy
- Clear graduations laser-etched on satin chrome finish for easy reading
- With spindle lock
- Carbide measuring surfaces ground for longer service life

Unit:mm

Code	Range*Graduation	A	B	C	L	W	H	Accuracy
4111-9105-A	0-25*0.001	31	29.5	φ6.5	133.8	58.5	φ18	0.004
4111-9110-A	25-50*0.001	56	38	φ6.5	160	76	φ18	0.004
4111-9115-A	50-75*0.001	81	51	φ6.5	185.5	91	φ18	0.005
4111-9120-A	75-100*0.001	106	63.5	φ6.5	210.5	105	φ18	0.005
4111-9125-A	100-125*0.001	131	76	φ6.5	237.3	125	φ18	0.006
4111-9130-A	125-150*0.001	156	89	φ6.5	263.8	142	φ18	0.006
4112-0105-A	0-1""0.0001"	31	29.5	φ6.5	133.8	58.5	φ18	0.00015"
4112-0110-A	1-2""0.0001"	56	38	φ6.5	160	76	φ18	0.00015"
4112-0115-A	2-3""0.0001"	81	51	φ6.5	185.5	91	φ18	0.0002"
4112-0120-A	3-4""0.0001"	106	63.5	φ6.5	210.5	105	φ18	0.0002"
4112-0125-A	4-5""0.0001"	131	76	φ6.5	237.3	125	φ18	0.00025"
4112-0130-A	5-6""0.0001"	156	89	φ6.5	263.8	142	φ18	0.00025"

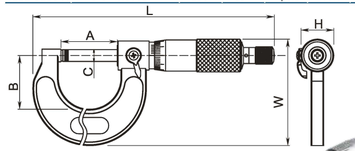

DIN 863

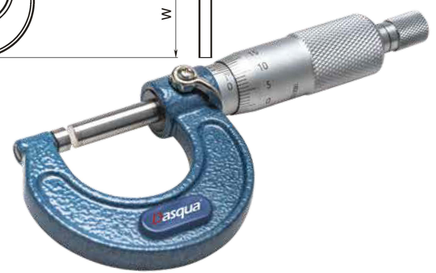

OUTSIDE MICROMETER

WITH THERMAL PROTECTION

- With thermal protection
- Strictly made in accordance with DIN 863
- With ratchet stop for constant force
- Spindle thread hardened, ground and lapped for ultimate accuracy
- Clear graduations laser-etched on satin chrome finish for easy reading
- With spindle lock

Unit:mm

Code	Range*Graduation	L	B	L	W	Accuracy
4111-6405	0-25*0.01	31	23.5	127.8	56.2	0.004
4111-6410	25-50*0.01	56.5	31	160.1	72.9	0.004
4111-6415	50-75*0.01	81.5	44	186.6	88.2	0.005
4111-6420	75-100*0.01	107.1	56	214.6	104.2	0.005
4111-6425	100-125*0.01	132.5	66	243.3	122.2	0.006
4111-6430	125-150*0.01	157.5	80	271.1	139.7	0.006

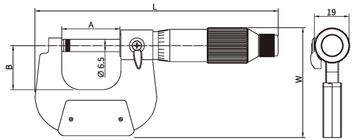

DIN 863



BIG SIZE OUTSIDE MICROMETER

- Stainless steel newly adapted on spindle
- Strictly made in accordance with DIN 863
- With ratchet stop for constant force
- Spindle thread hardened, ground and lapped for ultimate accuracy
- Clear graduations laser-etched on satin chrome finish for easy reading
- With spindle lock
- Bigger size for larger range
- Carbide measuring surfaces ground for longer service life

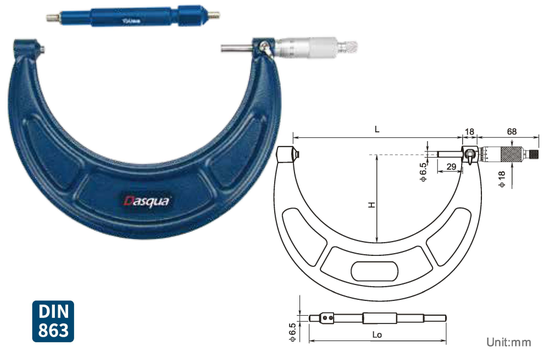

DIN 863

Unit:mm

Code	Range	Graduation	L	H	Lo	Accuracy
4112-8135	150-175	0.01	185	99	150	0.007
4112-8140	175-200	0.01	210	111.5	175	0.007
4112-8145	200-225	0.01	238	127	200	0.008
4112-8150	225-250	0.01	264	140	225	0.008
4112-8155	250-275	0.01	289	152.5	250	0.009
4112-8160	275-300	0.01	315	165.5	275	0.009
4112-5135	6-7"	0.001"	185	99	150	0.00027"
4112-5140	7-8"	0.001"	210	111.5	175	0.00027"
4112-5145	8-9"	0.001"	238	127	200	0.0003"
4112-5150	9-10"	0.001"	264	140	225	0.0003"
4112-5155	10-11"	0.001"	289	152.5	250	0.00035"
4112-5160	11-12"	0.001"	315	165.5	275	0.00035"

BIG SIZE OUTSIDE MICROMETER

WITH 0.001MM GRADUATION

- Stainless steel newly adapted on spindle
- Strictly made in accordance with DIN 863
- With ratchet stop for constant force
- Spindle thread hardened, ground and lapped for ultimate accuracy
- Clear graduations laser-etched on satin chrome finish for easy reading
- With spindle lock
- Bigger size for larger range
- Carbide measuring surfaces ground for longer service life

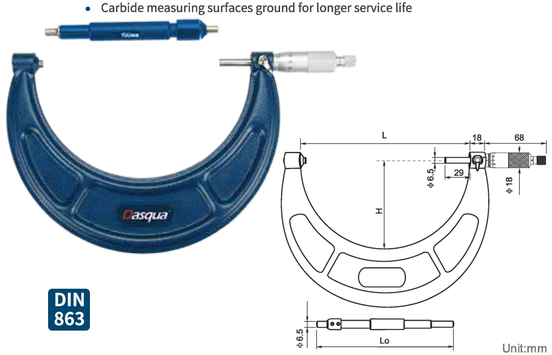

DIN 863

Unit:mm

Code	Range	Graduation	L	H	Lo	Accuracy
4111-9135	150-175	0.001	185	99	150	0.007
4111-9140	175-200	0.001	210	111.5	175	0.007
4111-9145	200-225	0.001	238	127	200	0.008
4111-9150	225-250	0.001	264	140	225	0.008
4111-9155	250-275	0.001	289	152.5	250	0.009
4111-9160	275-300	0.001	315	165.5	275	0.009
4112-1135	6-7"	0.0001"	185	99	150	0.00027"
4112-1140	7-8"	0.0001"	210	111.5	175	0.00027"
4112-1145	8-9"	0.0001"	238	127	200	0.0003"
4112-1150	9-10"	0.0001"	264	140	225	0.0003"
4112-1155	10-11"	0.0001"	289	152.5	250	0.00035"
4112-1160	11-12"	0.0001"	315	165.5	275	0.00035"

MICROMETER CALIBRATION GAUGE BLOCK SET

DIN ISO 3650

- Garde 0 or Grade 1 (optional)
- 10 pcs rectangular blocks and 1 optical flat
- 1 Optical Flat which allows checking anvil faces at half rotations of spindle for measuring flatness

MADE OF CERAMIC



Unit:mm

Code	Grade	Contents
6110-1211	0	The size of each gauge block 2.5,5.1,7.7,10.3,12.9,15.0,17.6,20.2,22.8,25.0; 1 pc optical with a flat glass φ30
6110-1405	1	The size of each gauge block 2.5,5.1,7.7,10.3,12.9,15.0,17.6,20.2,22.8,25.0; 1 pc optical with a flat glass φ30

MADE OF STAINLESS STEEL



Unit:mm

Code	Grade	Contents
6111-1210	0	The size of each gauge block 2.5,5.1,7.7,10.3,12.9,15.0,17.6,20.2,22.8,25.0; 1 pc optical with a flat glass φ30
6111-1211	1	The size of each gauge block 2.5,5.1,7.7,10.3,12.9,15.0,17.6,20.2,22.8,25.0; 1 pc optical with a flat glass φ30

OUTSIDE MICROMETER

WITH ADJUSTABLE ANVILS

- Wide measuring range with adjustable extension anvil collars
- Strictly made in accordance with DIN 863
- With ratchet stop for constant pressure
- Spindle thread hardened, ground and lapped for ultimate accuracy
- Clear graduations laser-etched on satin chrome finish for easy reading
- With spindle lock

DIN 863

Unit:mm

Code	Range	Graduation	L	H	Lo/L1	Accuracy
4800-0005	300-400	0.01	410	215	325/375	0.011
4800-0010	400-500	0.01	510	265	425/475	0.013
4800-0015	500-600	0.01	610	315	525/575	0.015
4800-0020	600-700	0.01	710	365	625/675	0.016
4800-0025	700-800	0.01	810	415	725/775	0.018
4800-0030	800-900	0.01	910	465	825/875	0.02
4800-0035	900-1000	0.01	1010	515	925/975	0.022
4810-0005	12"-16"	0.001"	410	215	325/375	0.0004"
4810-0010	16-20"	0.001"	510	265	425/475	0.0005"
4810-0015	20"-24"	0.001"	610	315	525/575	0.0006"
4810-0020	24"-28"	0.001"	710	365	625/675	0.0006"
4810-0025	28"-32"	0.001"	810	415	725/775	0.0007"
4810-0030	32"-36"	0.001"	910	465	825/875	0.0008"
4810-0035	36"-40"	0.001"	1010	515	925/975	0.00085"

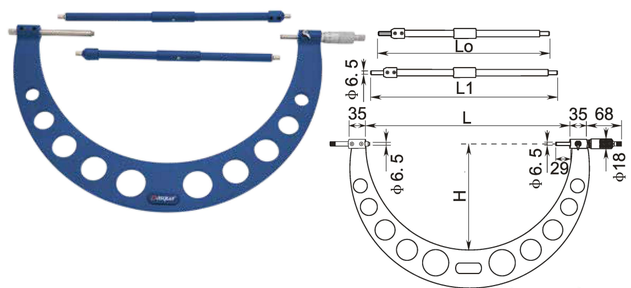

OUTSIDE MICROMETER

WITH INTERCHANGEABLE ANVILS

- Strictly made in accordance with DIN863
- Wide measuring range with interchangeable anvils
- Distinct black lines and figures laser engraved against satin chrome finish provide easy and error-free reading
- Carbide tipped measuring face

DIN 863

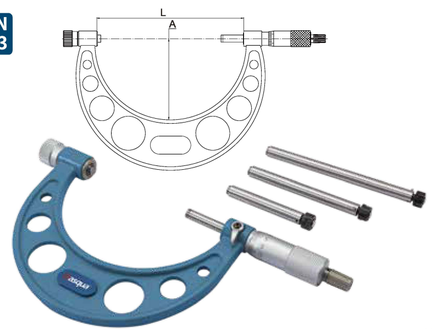

Unit:mm

Code	Range	Graduation	A	L	Accuracy
4801-0001	0-50	0.01	35	58	0.004
4801-0002	0-100	0.01	57	108	0.005
4801-0003	0-150	0.01	82	158	0.006
4801-0004	100-200	0.01	114	208	0.007
4801-0005	150-300	0.01	165	308	0.009
4801-0006	200-300	0.01	165	308	0.009
4801-0007	300-400	0.01	224	409	0.011
4801-0008	400-500	0.01	275	509	0.013
4801-0009	500-600	0.01	321	609	0.015
4801-0010	600-700	0.01	371	709	0.016
4801-0011	700-800	0.01	426	809	0.018
4801-0012	800-900	0.01	476	909	0.020
4801-0013	900-1000	0.01	576	1009	0.020

OUTSIDE MICROMETER

WITH COUNTER

- Strictly made in accordance with DIN863
- Mechanical digit counter for quick and error-free reading
- Carbide measuring face
- Resolution: 0.01mm(Metric);0.0001"(Inch)
- Counter readout: 0.01mm(Metric); 0.001"(Inch)

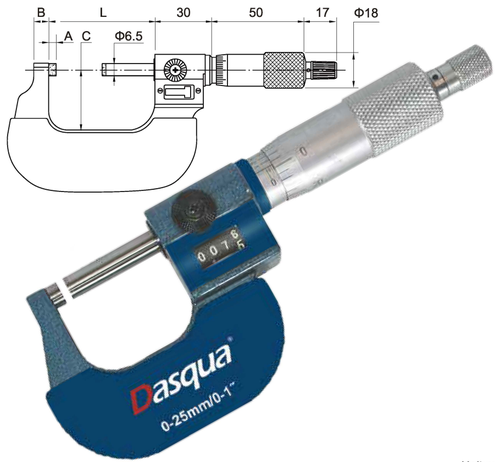

Unit:mm

Code	Range	Graduation	A	B	C	L	Accuracy
4150-1005	0-25	0.01	3	6	26	32	0.004
4150-1010	25-50	0.01	3	8	32	57	0.004
4150-1015	50-75	0.01	3	8	44.5	82	0.005
4150-1020	75-100	0.01	3	8	57	107	0.005
4150-1025	100-125	0.01	3	17	71.8	132.4	0.006
4150-1030	125-150	0.01	3	17	84	157.8	0.006

OUTSIDE MICROMETER SET

- 3pcs, 4pcs, 6pcs,12pcs optional for customers' desire
- Strictly made in accordance with DIN 863
- With ratchet stop for constant pressure
- Spindle thread hardened, ground and lapped for ultimate accuracy
- Clear graduations laser-etched on satin chrome finish for easy reading
- With spindle lock

DIN 863



Unit:mm

Code	Range	Graduation	Set(Pcs)	Package
4111-8206	0-75	0.01	3	Plastic Box
4111-8210	0-100	0.01	4	Plastic Box
4111-8215	0-150	0.01	6	Aluminium Case
4111-8203	0-300	0.01	12	Aluminium Case
4111-8213	150-300	0.01	6	Aluminium Case
4112-0206	0-3"	0.001"	3	Plastic Box
4112-0210	0-4"	0.001"	4	Plastic Box
4112-0216	0-6"	0.001"	6	Aluminium Case
4112-0208	0-12"	0.001"	12	Aluminium Case
4112-0218	6"-12"	0.001"	6	Aluminium Case
4111-8006	0-75	0.001	3	Plastic Box
4111-8010	0-100	0.001	4	Plastic Box
4111-8220	0-150	0.001	6	Aluminium Case
4111-8408	0-300	0.001	12	Aluminium Case
4111-8008	150-300	0.001	6	Aluminium Case
4112-0006	0-3"	0.0001"	3	Plastic Box
4112-0010	0-4"	0.0001"	4	Plastic Box
4112-0215	0-6"	0.0001"	6	Aluminium Case
4112-0203	0-12"	0.0001"	12	Aluminium Case
4112-0213	6"-12"	0.0001"	6	Aluminium Case

OUTSIDE MICROMETER SET

- 3pcs, 4pcs, 6pcs optional for customers' desire
- Strictly made in accordance with DIN 863
- With ratchet stop for constant pressure
- Spindle thread hardened, ground and lapped for ultimate accuracy
- Clear graduations laser-etched on satin chrome finish for easy reading
- With spindle lock
- Made with thermal protection frame

Unit:mm

Code	Range	Graduation	Set(Pcs)	Package
4111-8205	0-75	0.01	3	Plastic Box
4111-8240	0-100	0.01	4	Plastic Box
4111-8245	0-150	0.01	6	Aluminium Case
4112-0205	0-3"	0.0001"	3	Plastic Box
4112-0240	0-4"	0.0001"	4	Plastic Box
4112-0245	0-6"	0.0001"	6	Aluminium Case

DIN 863



DIGITAL OUTSIDE MICROMETER

WITH STAINLESS STEEL SPINDLE

- Spindle ground twice which makes pitch error 1μ less than before and reaches world-class standard

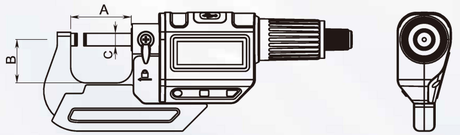

Unit:mm

Code	Range	Resolution	A	B	C	Accuray
4230-2005	0-25/0-1"	0.001/0.00005"	31.5	22.5	φ6.5	0.003
4230-2010	25-50/1"-2"	0.001/0.00005"	56.5	31	φ6.5	0.003
4230-2015	50-75/2"-3"	0.001/0.00005"	81.5	44	φ6.5	0.004
4230-2020	75-100/3"-4"	0.001/0.00005"	107.1	56	φ6.5	0.004
4230-2025	100-125/4"-5"	0.001/0.00005"	132	66	φ6.5	0.005
4230-2030	125-150/5"-6"	0.001/0.00005"	156.5	80	φ6.5	0.005
4230-2035	150-175/6"-7"	0.001/0.00005"	184	94.5	φ6.5	0.007
4230-2040	175-200/7"-8"	0.001/0.00005"	209.5	107	φ6.5	0.007
4230-2045	200-225/8"-9"	0.001/0.00005"	234	129.5	φ6.5	0.008
4230-2050	225-250/9"-10"	0.001/0.00005"	259.5	142.5	φ6.5	0.008
4230-2055	250-275/10"-11"	0.001/0.00005"	285	155	φ6.5	0.009
4230-2060	275-300/11"-12"	0.001/0.00005"	310.5	167.5	φ6.5	0.009

- New special carbide used on measuring anvil instead of traditional easy-wear off carbide tip

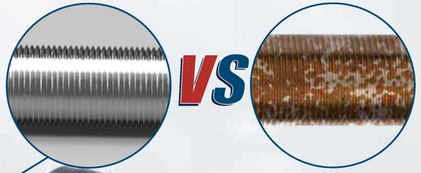

- Stainless steel newly adapted on spindle instead of carbon steel

Battery CR2032 | DIN 863 | mm/in



- With ratchet stop for constant force(5- 8N 20% higher than normal)

IP65 WATER PROOF DIGITAL OUTSIDE MICROMETER

- With large easy-to-read LCD screen
- Strictly made in accordance with DIN863
- Spindle hardened, ground and lapped for ultimate accuracy
- With spindle lock
- With Absolute, Inch-Metric Conversion and Zero-Set function
- IP65 protection against liquid
- Stainless steel newly adapted on spindle
- Carbide measuring surfaces ground for longer service life

Unit:mm

Code	Range	Resolution	A	B	C	L	W	H	Accuracy
4410-1105	0-25/0-1"	0.001/0.00005"	29.8	24.5	φ6.5	159.5	59.6	23.5	0.003/0.00015"
4410-1110	25-50/1-2"	0.001/0.00005"	55.3	31	φ6.5	188.5	75.7	23.5	0.003/0.00015"
4410-1115	50-75/2-3"	0.001/0.00005"	80.8	44	φ6.5	219	90.7	23.5	0.004/0.00015"
4410-1120	75-100/3-4"	0.001/0.00005"	105.8	56	φ6.5	246.5	107.2	23.5	0.004/0.00015"
4410-1125	100-125/4-5"	0.001/0.00005"	130.8	68	φ6.5	278	125.3	23.5	0.005/0.0002"
4410-1130	125-150/5-6"	0.001/0.00005"	155.8	81	φ6.5	307.5	141.3	23.5	0.005/0.0002"

DIN 863 | mm/in | Battery CR2032 | IP65 COOLANT&FLUID RESISTANT



IP65 WATER PROOF DIGITAL OUTSIDE MICROMETER

WITH ADJUSTABLE ANVILS

- Strictly made in accordance with DIN863
- Wide measuring range with adjustable anvil
- High accuracy standard collars enable that reading does not have to be reset when changing collars
- Standard collars: Within 1000mm/40": 25mm/1", 50mm/2"
- With carbide measuring faces
- Pipe combined frame for light weight and high rigidity
- IP65 protection against liquid

DIN 863 | IP65 COOLANT&FLUID RESISTANT | mm/in | Battery LR44 | Data output

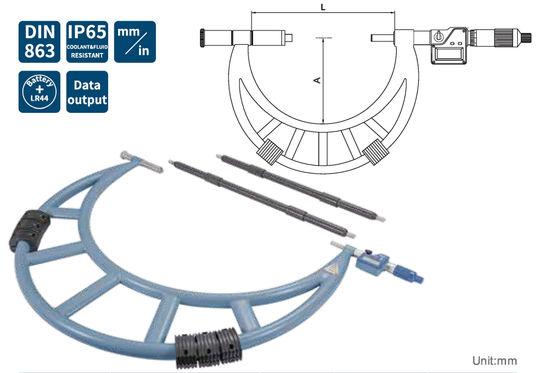

Unit:mm

Code	Range	A	L	Resolution	Accuracy
4905-0005	300-400	224	409	0.001/0.00005"	0.011
4905-0006	400-500	275	509	0.001/0.00005"	0.013
4905-0007	500-600	321	609	0.001/0.00005"	0.015
4905-0008	600-700	371	709	0.001/0.00005"	0.016
4905-0009	700-800	426	809	0.001/0.00005"	0.018
4905-0010	800-900	476	909	0.001/0.00005"	0.020
4905-0011	900-1000	576	1009	0.001/0.00005"	0.020

IP65 WATER PROOF OUTSIDE MICROMETER

WITH INTERCHANGEABLE ANVILS

- Wide measuring range with interchangeable anvils
- High accuracy interchangeable anvils enable that reading does not have to be reset when changing anvils
- With carbide measuring faces
- IP65 protection against liquid

DIN 863 | IP65 COOLANT&FLUID RESISTANT | mm/in | BATTERY + LR44 | Data output

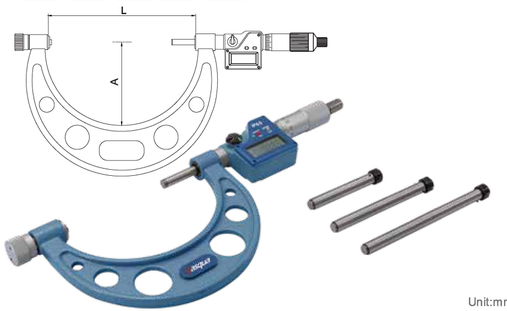

Unit:mm

Code	Range	Resolution	Anvil(pcs)	A	L	Accuracy
4706-0001	0-100	0.001/0.00005"	4	57	108	±0.003
4706-0002	100-200	0.001/0.00005"	4	114	208	±0.004
4706-0003	200-300	0.001/0.00005"	4	165	308	±0.005
4706-0004	300-400	0.001/0.00005"	4	224	409	±0.006
4706-0005	400-500	0.001/0.00005"	4	275	509	±0.007
4706-0006	500-600	0.001/0.00005"	4	321	609	±0.007
4706-0007	600-700	0.001/0.00005"	4	371	709	±0.008
4706-0008	700-800	0.001/0.00005"	4	426	809	±0.009
4706-0009	800-900	0.001/0.00005"	4	476	909	±0.010
4706-0010	900-1000	0.001/0.00005"	4	576	1009	±0.010

IP65 WATER PROOF DIGITAL QUICK-MOVE MICROMETER

Unit:mm

Code	Range	Resolution	A	B	C	L	W	H	Accuracy
4220-2105	0-25/0-1"	0.001/0.00005"	29.8	25.4	φ6.5	168.6	64.6	30.8	0.003/0.00015"
4220-2110	25-50/1-2"	0.001/0.00005"	55.3	31	φ6.5	197.2	80.5	30.8	0.003/0.00015"
4220-2115	50-75/2-3"	0.001/0.00005"	80.3	44	φ6.5	227.5	96	30.8	0.004/0.00015"
4220-2120	75-100/3-4"	0.001/0.00005"	105.3	56	φ6.5	257.6	112.5	30.8	0.004/0.00015"

WITH WIRELESS SYSTEM

Unit:mm

Code	Range	Resolution	A	B	C	L	W	H	Accuracy
4610-3105	0-25/0-1"	0.001/0.00005"	29.8	25.4	φ6.5	168.6	64.6	30.8	0.003/0.00015"
4610-3110	25-50/1-2"	0.001/0.00005"	55.3	31	φ6.5	197.2	80.5	30.8	0.003/0.00015"
4610-3115	50-75/2-3"	0.001/0.00005"	80.3	44	φ6.5	227.5	96	30.8	0.004/0.00015"
4610-3120	75-100/3-4"	0.001/0.00005"	105.3	56	φ6.5	257.6	112.5	30.8	0.004/0.00015"

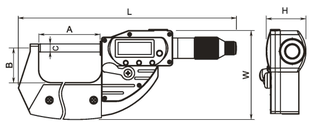

DIN 863 | mm/in | BATTERY + CR2032 | IP65 COOLANT&FLUID RESISTANT | Absolute | Data output | WIRELESS TRANSMITTER



DIAL SNAP MICROMETER

- Retractable anvils with indicator to quickly check go/no-go of mass-produced parts
- Clear graduations laser-etched on satin chrome finish for easy reading for double-checking
- Spindle hardened, ground and lapped for ultimate accuracy
- With spindle lock

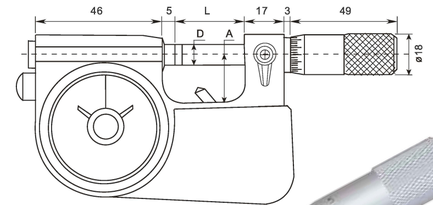



• 4146-1005

Unit:mm

Code	Range	Graduation of Micrometer Head	Graduation of Indicator	A	D	L
4146-1005	0-25	0.002	0.001	19	φ6.5	28.5
4146-1010	25-50	0.002	0.001	30	φ6.5	53.5
4146-1015	50-75	0.002	0.001	45	φ6.5	78.5
4146-1020	75-100	0.002	0.001	57	φ6.5	103.5
4146-1000	0-25	0.002	0.001	19	φ8	28.5

DIAL SNAP GAUGE

- Strictly made in accordance with DIN863
- Direct GO/NG judgement for mass produced parts
- Operating and display units antiglare with satin chrome finish
- Adjustable tolerance makers
- Constant measuring force
- IP54 protection against liquid
- Carbide measuring face: Φ10

Unit:mm

Code	Range	Graduation	L	D
4146-5105	0-25	0.001	28.5	25
4146-5110	25-50	0.001	53.5	35
4146-5115	50-75	0.001	78.5	47.5
4146-5120	75-100	0.001	103.5	60

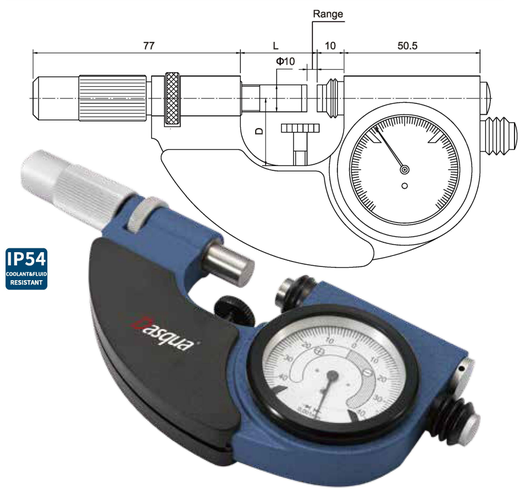

MICROMETER

WITH DIAL INDICATOR

- Uses dial indicator for direct GO/NG-GO judgment for mass-produced parts
- Anvil retracting trigger for quick measurement
- With a standard bar except for 0 - 25mm models



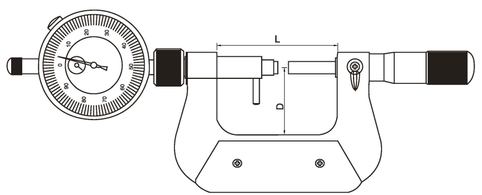

Unit:mm

Code	Range	L	D	Graduation	Accuracy
4403-0005	0-25	67	38	0.01	0.004
4403-0010	25-50	92	50	0.01	0.004
4403-0015	50-75	118	62	0.01	0.005
4403-0020	75-100	143	70	0.01	0.005
4403-0025	100-125	168	82	0.01	0.006
4403-0030	125-150	192	95	0.01	0.006
4403-0035	150-175	217	107	0.01	0.007



6.5MM MICROMETER HEAD

- Mount on precision equipment or machinery like machines, fixed devices, special tools, etc
- Carbide measuring surfaces ground for longer service life
- With ratchet stop for constant pressure
- Spindle thread hardened, ground and lapped for ultimate accuracy
- Clear graduations laser-etched on satin chrome finish for easy reading
- Straight stem/Stem with clamp nut optional
- Flat face/Spherical face optional

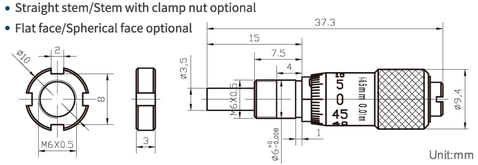

Unit:mm

Code	Range	Graduation	Accuracy	Remark
4811-8105	0-6.5	0.01	0.04	/
4833-8105	0-6.5	0.01	0.04	W/Clamp Nut
4733-8105	0-6.5	0.01	0.04	W/Clamp Nut/Spherical

13MM MICROMETER HEAD

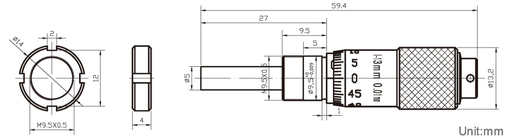

Unit:mm

Code	Range	Graduation	Accuracy	Remark
4811-8110	0-13	0.01	0.04	/
4833-8110	0-13	0.01	0.04	W/Clamp Nut
4811-7310	0-13	0.01	0.04	W/Spindle Lock
4833-7310	0-13	0.01	0.04	W/Clamp Nut+W/Spindle Lock
4711-8110	0-13	0.01	0.04	Spherical
4733-8110	0-13	0.01	0.04	W/Clamp Nut/Spherical
4711-7314	0-13	0.01	0.04	W/Spindle Lock/Spherical
4733-7310	0-13	0.01	0.04	W/Clamp Nut+W/Spindle Lock/Spherical

25MM MICROMETER HEAD

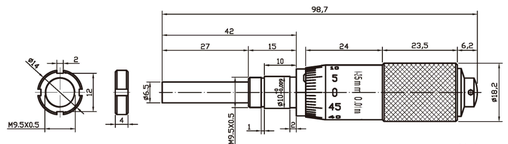

Unit:mm

Code	Range	Graduation	Accuracy	Remark
4811-8115-A	0-25	0.01	0.04	/
4833-8115-A	0-25	0.01	0.04	W/Clamp Nut
4811-7315-A	0-25	0.01	0.04	W/Spindle Lock
4833-7315-A	0-25	0.01	0.04	W/Clamp Nut+W/Spindle Lock
4711-8115-A	0-25	0.01	0.04	Spherical
4733-8115-A	0-25	0.01	0.04	W/Clamp Nut/Spherical
4711-7315-A	0-25	0.01	0.04	W/Spindle Lock/Spherical
4733-7315-A	0-25	0.01	0.04	W/Clamp Nut+W/Spindle Lock/Spherical

50MM MICROMETER HEAD

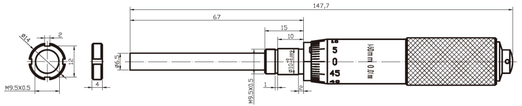

Unit:mm

Code	Range	Graduation	Accuracy	Remark
4811-8120-A	0-50	0.01	0.04	/
4833-8120-A	0-50	0.01	0.04	W/Clamp Nut
4811-7320-A	0-50	0.01	0.04	W/Spindle Lock
4833-7320-A	0-50	0.01	0.04	W/Clamp Nut+W/Spindle Lock
4711-8120-A	0-50	0.01	0.04	Spherical
4733-8120-A	0-50	0.01	0.04	W/Clamp Nut/Spherical
4711-7320-A	0-50	0.01	0.04	W/Spindle Lock/Spherical
4733-7320-A	0-50	0.01	0.04	W/Clamp Nut+W/Spindle Lock/Spherical

INCH MICROMETER HEAD

- Mount on precision equipment or machinery like machines, fixed devices, special tools, etc
- Carbide measuring surfaces ground for longer service life
- With ratchet stop for constant pressure
- Spindle thread hardened, ground and lapped for ultimate accuracy
- Clear graduations laser-etched on satin chrome finish for easy reading
- Straight stem/Stem with clamp nut optional
- Flat face/Spherical face optional



Unit:mm

Code	Range	Graduation	Accuracy	Remark
4812-5105	0-0.25"	0.001"	0.0015"	W/Clamp Nut
4812-5110	0-0.5"	0.001"	0.0015"	W/Clamp Nut
4812-5115-A	0-1"	0.001"	0.0015"	W/Clamp Nut+W/Spindle Lock
4812-5120-A	0-2"	0.001"	0.0015"	W/Clamp Nut+W/Spindle Lock

MICROMETER HEAD

WITH LARGE THIMBLE DIAMETER

- Strictly made in accordance with DIN863
- Operating and display units antiglare with satin chrome finish
- Stainless spindle is hardened throughout and ground
- Rapid drive with integrated ratchet
- Carbide tipped measuring face
- with clamp nut

Unit:mm

Code	Range	Graduation	Accuracy	Remark
4811-8125	0-6.5	0.01	0.005	/
4833-8125	0-6.5	0.01	0.005	W/Clamp Nut
4711-8125	0-6.5	0.01	0.005	Spherical
4733-8125	0-6.5	0.01	0.005	W/Clamp Nut/Spherical
4811-8130	0-13	0.01	0.004	/
4833-8130	0-13	0.01	0.004	W/Clamp Nut

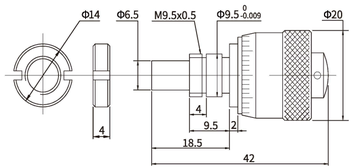



DIGITAL MICROMETER HEAD

WITH CLAMP NUT

- Strictly made in accordance with DIN863
- Incremental capacitor measurement system
- IP65 protection against liquid
- 3V lithium battery CR2032
- SPC data output
- With carbide measuring face
- With painted frame
- Flat face (spherical tip optional)
- Spindle hardened and ground

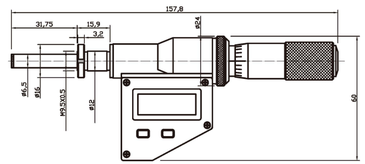

DIN 863 | Data output | mm/in | BATTERY CR2032 | IP65 COOLANT&FLUID RESISTANT



Unit:mm

Code	Range	Resolution	Accuracy
4910-2130	0-25/0-1"	0.001/0.00005"	0.003/0.00015"
4910-2135	0-50/0-2"	0.001/0.00005"	0.003/0.00015"

DIGITAL MICROMETER HEAD

- Mount on precision equipment or machinery like machines, fixed devices, special tools, etc
- where need 0.001mm accuracy
- Stictly made in accordance with DIN863
- Equipped with large LCD screen for easy reading
- Spindle thread hardened, ground and lapped for ultimate accuracy
- Carbide measuring surfaces ground for longer service life
- Flat face/Spherical face optional

Unit:mm

Code	Range	Resolution	Accuracy
4910-2110	0-15/0-0.5"	0.001/0.00005"	0.003/0.00015"
4910-2115	0-25/0-1"	0.001/0.00005"	0.003/0.00015"

DIN 863 | Data output | mm/in | BATTERY CR2032

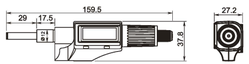

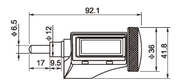



DEPTH MICROMETER

- Used to measure depth of holes or parts with grooved or elevated surfaces
- Strictly made in accordance with DIN 863
- With ratchet stop for constant force
- Spindle hardened, ground and lapped for ultimate accuracy
- Clear graduations laser-etched on satin chrome finish for easy reading
- With measuring rod clamp
- Carbide measuring surfaces ground for longer service life

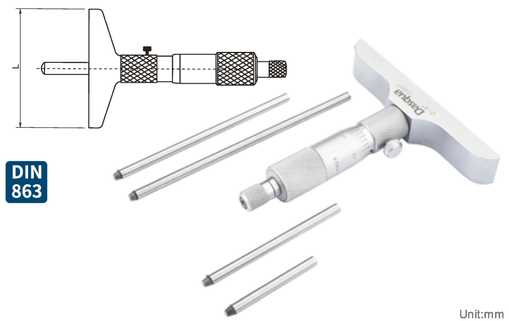

DIN 863

Unit:mm

Code	Range	Graduation	Accuracy	L	Anvil(pcs)
4611-8106	0-25	0.01	±0.004	102	1
4611-8110	0-50	0.01	±0.004	102	2
4611-8115	0-75	0.01	±0.006	102	3
4611-8120	0-100	0.01	±0.006	102	4
4611-8125	0-150	0.01	±0.007	102	6
4611-8129	0-200	0.01	±0.008	102	8
4611-8130	0-300	0.01	±0.010	102	12
4612-5106	0-1"	0.001"	±0.00016"	102	1
4612-5110	0-2"	0.001"	±0.00016"	102	2
4612-5115	0-3"	0.001"	±0.00025"	102	3
4612-5120	0-4"	0.001"	±0.00025"	102	4
4612-5125	0-6"	0.001"	±0.00025"	102	6
4612-5130	0-8"	0.001"	±0.0003"	102	8
4612-5135	0-12"	0.001"	±0.0004"	102	12

DIGITAL DEPTH MICROMETER

- Used to measure depth of holes or parts with grooved or elevated surfaces
- Strictly made in accordance with DIN 863
- With ratchet stop for constant force
- Spindle hardened, ground and lapped for ultimate accuracy
- Large easy-to-read display
- Extension rods of different lengths offering larger measuring ranges
- With Hold, Zero, Metric/Inch Conversion function

DIN 863 | mm/in | BATTERY CR2032

Unit:mm

Code	Range	Resolution	Accuracy
4710-2205	0-150/0-6"	0.001/0.00005"	0.005/0.0002"

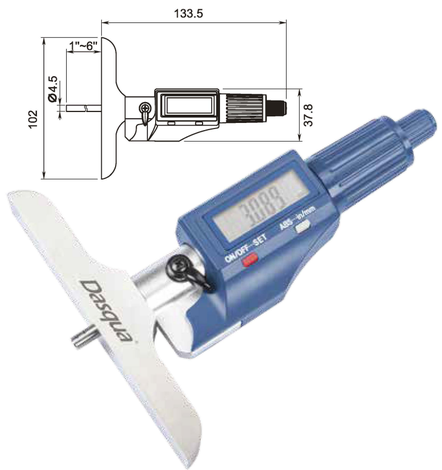

DIAL DEPTH GAUGE

- Used to measure depth of holes or parts with grooved or elevated surfaces
- Dial Indicator for easy and clear reading
- Hardened base with fine lapped contact surface
- Extension rods of different lengths offering larger measuring ranges

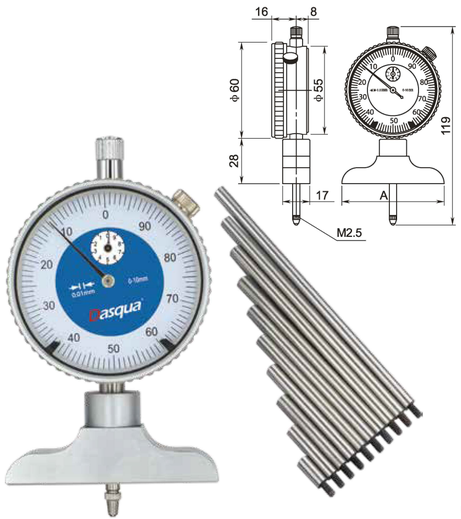

Unit:mm

Code	Range	Graduation	Base Length(A)	Depth	Remark
5822-4100	0-1"	0.001"	2.5"	6"	With 5 rods 1-5", step by 1"
5822-4105	0-1"	0.001"	4"	6"	With 5 rods 1-5", step by 1"
5821-1100	0-10	0.01	64	100	With 9 rods 10-90,step by10
5821-1105	0-10	0.01	100	100	With 9 rods 10-90,step by10

DIGITAL DEPTH GAGE

- Super-large display
- Hardened,ground and lapped measuring face
- Spring-loaded and hold measurement button for easy-to-use
- Supplied in fitted case

Unit:mm

Code	Range	Resolution	Travel	Accuracy	Anvil
4710-1205	0-16"/400	0.01/0.0005"	0-25/0-1"	0.03/0.0015"	1"/2"/3"/4"/5"

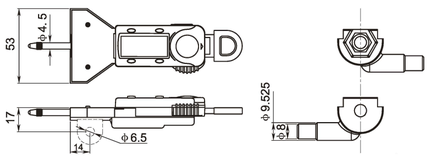

mm/in | BATTERY CR2032



TUBULAR INSIDE MICROMETER

- Wide range by combining extension rods and anvils with the micrometer head
- Strictly made in accordance with DIN 863
- Measuring rods hardened, ground and lapped
- Clear graduations laser-etched on satin chrome finish for easy reading



Unit:mm

Code	Range	Graduation	Extension Rod	Accuracy
4311-8103	50-63	0.01	Micrometer head	0.005
4311-8106	50-100	0.01	13,25	0.007
4311-8107	50-150	0.01	13,25,50	0.009
4311-8109	50-300	0.01	13,25,50(2pcs),100	0.014
4311-8111	50-500	0.01	13,25,50(2pcs),100,200	0.019
4311-8113	50-600	0.01	13,25,50,100,150,200	0.021
4311-8118	50-1000	0.01	13,25,50,100(2pcs),150,200,300	0.031
4311-8119	50-1500	0.01	13,25,50,100(2pcs),150,200(2pcs),300(2pcs)	0.043
4312-5103	2-2.5"	0.001"	Micrometer head	0.0002"
4312-5106	2-4"	0.001"	0.5",1"	0.00025"
4312-5109	2-12"	0.001"	0.5",1",2"(2pcs),4"	0.00045"
4312-5112	2-20"	0.001"	0.5",1",2"(2pcs),4",8"	0.00065"
4312-5113	2-40"	0.001"	0.5",1",2",4"(2pcs.),6",8",12"	0.00115"

TUBULAR INSIDE MICROMETER

- Wide range by combining extension rods and anvils with the micrometer head
- Strictly made in accordance with DIN 863
- Measuring rods hardened, ground and lapped
- Clear graduations laser-etched on satin chrome finish for easy reading

Unit:mm

Code	Range	Graduation	Travel of micrometer	Extension Rod
4311-8220	1000-2000	0.01	50	50,100(2pcs),200,500
4311-8225	1000-3000	0.01	50	50,100(2pcs),200,500,1000
4311-8230	1000-4000	0.01	50	50,100(2pcs),200,500,1000(2pcs)
4311-8235	1000-5000	0.01	50	50,100(2pcs),200,500,1000(3pcs)



INSIDE MICROMETER

- Used to measure various inside dimensions
- With ratchet stop for constant pressure
- Spindle thread hardened, ground and lapped for ultimate accuracy
- Clear graduations laser-etched on satin chrome finish for easy reading
- With spindle lock
- Carbide measuring surfaces ground for longer service life
- An inside micrometer set is optional

Unit:mm

Code	Range	Graduation	Type	A	B	C	D	Accuracy	Ring gage
4911-8105	5-30	0.01	A	2.3	4.5	5.5	27.5	±0.005	✓
4911-8110	25-50	0.01	B	12.3	4.5	/	27.5	±0.006	✓
4911-8115	50-75	0.01	B	12.3	4.5	/	27.5	±0.007	/
4911-8120	75-100	0.01	B	12.3	4.5	/	27.5	±0.008	/
4911-8125	5-100	0.01	/	/	/	/	/	/	/
4912-5105	0.2-1.2"	0.001"	A	2.3	4.5	5.5	27.5	±0.00025"	✓
4912-5110	1-2"	0.001"	B	12.3	4.5	/	27.5	±0.0003"	✓
4912-5115	2-3"	0.001"	B	12.3	4.5	/	27.5	±0.00035"	/
4912-5120	3-4"	0.001"	B	12.3	4.5	/	27.5	±0.0004"	/
4912-5125	0.2-4"	0.001"	/	/	/	/	/	/	/

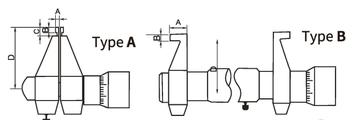



DIGITAL INSIDE MICROMETER

- Strictly made in accordance with DIN863
- For easy and rapid measurement of various inside dimensions
- LCD display with clear reading, metric/inch conversion
- Zero setting at any position
- Clamp wheel for quick and precise fixing
- With ratchet for constant measuring pressure
- Incl. 1x 1.5V battery



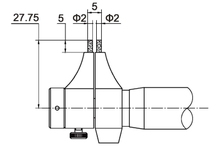

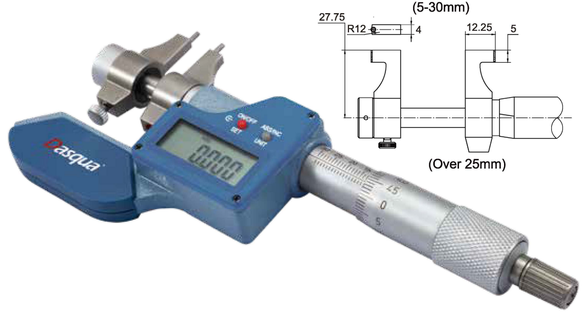

Unit:mm

Code	Range	Resolution	Accuracy
4910-4105	5-30/0.2"-1.2"	0.001/0.00005"	±0.003
4910-4110	25-50/1"-2"	0.001/0.00005"	±0.003
4910-4115	50-75/2"-3"	0.001/0.00005"	±0.004
4910-4120	75-100/3"-4"	0.001/0.00005"	±0.004

3 POINTS INSIDE MICROMETER

- Applied for measuring through-holes and blind-holes
- With extension rods which are available in deeper holes
- With Ratchet stop for constant force
- Highly durable because of carbide-tipped measuring surfaces
- Setting rings for zero point adjustment
- Clear graduations laser-etched on satin chrome finish for easy reading
- Spindle hardened, ground and lapped for ultimate accuracy

DIN 863

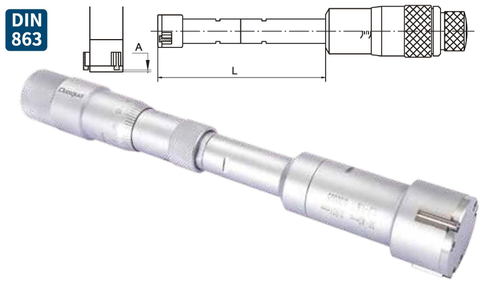



Unit:mm

Code	Range	Setting Ring	Graduation	L	A	Accuracy
4411-5101	6-8	φ6	0.001	54.5	1.5	0.004
4411-5102	8-10	φ8	0.001	54.5	1.5	0.004
4411-5103	10-12	φ10	0.001	54.5	1.5	0.004
4411-5104	12-16	φ12	0.005	80	0.5	0.004
4411-5105	16-20	φ16	0.005	80	0.5	0.004
4411-5106	20-25	φ20	0.005	90	0.5	0.004
4411-5107	25-30	φ25	0.005	90	0.5	0.004
4411-5108	30-40	φ30	0.005	97	0.5	0.004
4411-5109	40-50	φ40	0.005	97	0.5	0.005
4411-5110	50-63	φ50	0.005	114	0.5	0.005
4411-5111	62-75	φ62	0.005	114	0.5	0.005
4411-5112	75-88	φ75	0.005	114	0.5	0.005
4411-5113	87-100	φ87	0.005	114	0.5	0.005

3 POINTS INSIDE MICROMETER SET

Unit:mm

Code	Range	Setting Ring	Graduation	Extension Rod	L	A	Accuracy
4411-9205	6-12	φ8/φ10	0.001	50	54.5	1.5	0.004
4411-3210	12-20	φ16	0.005	100	80	0.5	0.004
4411-3215	20-50	φ25/φ40	0.005	150	90/97	0.5	0.004
4411-3220	50-100	φ62/φ87	0.005	150	114	0.5	0.005
4412-0205	0.275-0.5"	0.35"/0.5"	0.0001"	4"	2.18"	0.06"	0.00016"
4412-4210	0.5-0.8"	0.65"	0.0002"	6"	3.2"	0.02"	0.00016"
4412-4207	0.8-2"	1"/1.6"	0.0002"	6"	3.6"/3.88"	0.02"	0.00016"
4412-4208	2-4"	2.5"/3.5"	0.0002"	6"	4.56"	0.02"	0.0002"

IP54 WATER PROOF DIGITAL
3 POINTS INSIDE MICROMETER

- Applied for measuring through-holes and blind-holes
- With extension rods which are available in deeper holes
- With Ratchet stop for constant force
- Highly durable because of carbide-tipped measuring surfaces
- Setting rings for zero point adjustment
- Large easy-to read display
- Spindle hardened, ground and lapped for ultimate accuracy
- IP54 protection against liquid
- With ABSOLUTE, Hold and Metric/Inch Conversion function

mm/in | DIN 863 | BATTERY + CR2032 | IP54 COOLANT&FLUID RESISTANT | Data output





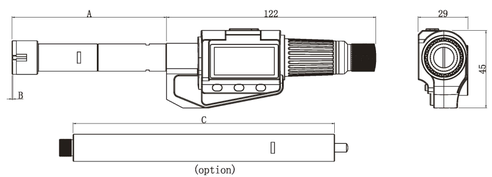

Unit:mm

Code	Range	Setting Ring	Resolution	A	B	Accuracy
4511-5101	6-8	φ6	0.001/0.00005"	55	1	0.004
4511-5102	8-10	φ8	0.001/0.00005"	55	1.5	0.004
4511-5103	10-12	φ10	0.001/0.00005"	55	1.5	0.004
4511-5104	12-16	φ12	0.001/0.00005"	80	0.5	0.004
4511-5105	16-20	φ16	0.001/0.00005"	80	0.5	0.004
4511-5106	20-25	φ20	0.001/0.00005"	90	0.5	0.004
4511-5107	25-30	φ25	0.001/0.00005"	90	0.5	0.004
4511-5108	30-40	φ30	0.001/0.00005"	105	0.5	0.004
4511-5109	40-50	φ40	0.001/0.00005"	105	0.5	0.005
4511-5110	50-63	φ50	0.001/0.00005"	127	0.5	0.005
4511-5111	62-75	φ62	0.001/0.00005"	127	0.5	0.005
4511-5112	75-88	φ75	0.001/0.00005"	127	0.5	0.005
4511-5113	87-100	φ87	0.001/0.00005"	127	0.5	0.005

IP54 WATER PROOF DIGITAL
3 POINTS INSIDE MICROMETER SET

Unit:mm

Code	Range	Resolution	Setting Ring	Extension Rod(C)	A	B	Accuracy
4511-9205	6-12	0.001/0.00005"	φ8/φ10	101.6	55	1/1.5	0.004
4511-9210	12-20	0.001/0.00005"	φ16	152.4	80	0.5	0.004
4511-9215	20-50	0.001/0.00005"	φ25/φ40	152.4	90/105	0.5	0.004
4511-9220	50-100	0.001/0.00005"	φ62/φ87	152.4	127	0.5	0.005

IP65 WATER PROOF DIGITAL 3 POINTS INSIDE MICROMETER

- IP65 protection against liquid
- For through holes and from up 12.5 mm for blind holes also
- 3V Lithium battery CR2032
- Large LCD display with clear reading
- With data output
- Built in wireless data transmission (optional)
- With ratchet for constant measuring pressure
- With carbide measuring face
- Additional extensions can be added to increase the measuring depth (12mm above optional)
- Setting rings for origin point setting

DIN 863 | IP65 COOLANT&FLUID RESISTANT | mm/in | BATTERY + CR2032

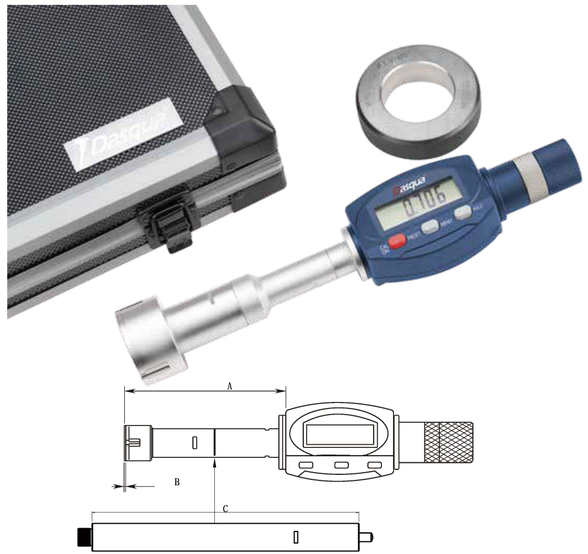

Unit:mm

Code	Range	Setting Ring	Resolution	A	B	Accuracy
4711-7301	6-8	φ6	0.001/0.00005"	55	1	0.004
4711-7302	8-10	φ8	0.001/0.00005"	55	1.5	0.004
4711-7303	10-12	φ10	0.001/0.00005"	55	1.5	0.004
4711-7304	12-16	φ12	0.001/0.00005"	80	0.5	0.004
4711-7305	16-20	φ16	0.001/0.00005"	80	0.5	0.004
4711-7306	20-25	φ20	0.001/0.00005"	90	0.5	0.004
4711-7307	25-30	φ25	0.001/0.00005"	90	0.5	0.004
4711-7308	30-40	φ30	0.001/0.00005"	105	0.5	0.004
4711-7309	40-50	φ40	0.001/0.00005"	105	0.5	0.005
4711-7310	50-63	φ50	0.001/0.00005"	127	0.5	0.005
4711-7311	62-75	φ62	0.001/0.00005"	127	0.5	0.005
4711-7312	75-88	φ75	0.001/0.00005"	127	0.5	0.005
4711-7313	87-100	φ87	0.001/0.00005"	127	0.5	0.005

IP65 WATER PROOF DIGITAL 3 POINTS INSIDE MICROMETER SET

Unit:mm

Code	Range	Resolution	Setting Ring	Extension Rod	A	B	Accuracy
4711-4405	6-12	0.001/0.00005"	φ8/φ10	101.6	55	1/1.5	0.004
4711-4410	12-20	0.001/0.00005"	φ16	152.4	80	0.5	0.004
4711-4415	20-50	0.001/0.00005"	φ25/φ40	152.4	90/105	0.5	0.004
4711-4420	50-100	0.001/0.00005"	φ62/φ87	152.4	127	0.5	0.005

DIGITAL 3-POINT PISTOL BORE GAUGE

- Absolute Capacitor system
- 3V Lithium battery CR2032
- SPC data output
- Built in wireless data transmission (optional)
- With ratchet for constant measuring pressure
- Measuring contact points are designed to allow measurements near the bottom of blind holes
- With carbide measuring face
- Additional extensions can be added to increase the measuring depth (12mm above optional)
- Setting rings for origin point setting
- Display can rotate 90°

mm/in | DIN 863 | BATTERY + CR2032 | Absolute | Data output

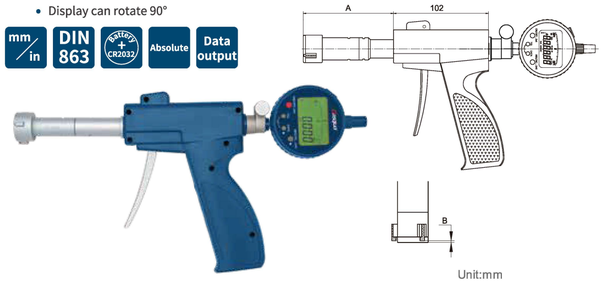

Unit:mm

Code	Range	Setting Ring	Resolution	A	B	Accuracy
4600-0001	6-8	φ6	0.001/0.00005"	55	1	0.004
4600-0002	8-10	φ8	0.001/0.00005"	55	1.5	0.004
4600-0003	10-12	φ10	0.001/0.00005"	55	1.5	0.004
4600-0004	12-16	φ12	0.001/0.00005"	80	0.5	0.004
4600-0005	16-20	φ16	0.001/0.00005"	80	0.5	0.004
4600-0006	20-25	φ20	0.001/0.00005"	90	0.5	0.004
4600-0007	25-30	φ25	0.001/0.00005"	90	0.5	0.004
4600-0008	30-40	φ30	0.001/0.00005"	105	0.5	0.004
4600-0009	40-50	φ40	0.001/0.00005"	105	0.5	0.005
4600-0010	50-63	φ50	0.001/0.00005"	127	0.5	0.005
4600-0011	62-75	φ62	0.001/0.00005"	127	0.5	0.005
4600-0012	75-88	φ75	0.001/0.00005"	127	0.5	0.005
4600-0013	87-100	φ87	0.001/0.00005"	127	0.5	0.005

UNIVERSAL DIGITAL MICROMETER

- 7 pairs of interchangeable anvils for universal use of measurement
- Strictly made in accordance with DIN863
- Spindle hardened, ground and lapped for ultimate accuracy
- With spindle lock
- With Absolute, Inch-Metric Conversion and Zero-Set function
- Stainless steel newly adapted on spindle
- Carbide measuring surfaces ground for longer service life

Unit:mm

Code	Range	Resolution
4210-2103	0-25/0-1"	0.001/0.00005"
4210-2106	25-50/1"-2"	0.001/0.00005"

DIN 863 | mm/in | BATTERY + LR44



DISC MICROMETER

DIN 863



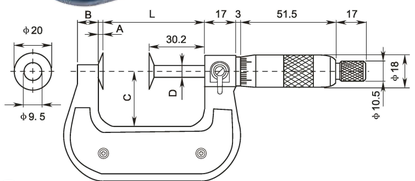

- Used to easily measure root tangent length of spur gears and helical gears
- Stainless steel newly adapted on spindle
- Strictly made in accordance with DIN863
- Spindle thread hardened, ground and lapped for ultimate accuracy
- Clear graduations laser-etched on satin chrome finish for easy reading
- With ratchet stop for constant force

Unit:mm

Code	Range*Graduation	L	A	B	C	D	Accuracy
4111-8102-A	0-25*0.01	33	2.8	7	24	φ6.5	0.004
4111-8104-A	25-50*0.01	58	2.8	11	30	φ6.5	0.004
4111-8106-A	50-75*0.01	83	2.8	11	42.5	φ6.5	0.005
4111-8108-A	75-100*0.01	108	2.8	11	55	φ6.5	0.005
4112-5102-A	0-1"*0.001"	33	2.8	7	24	φ6.5	0.0002"
4112-5104-A	1-2"*0.001"	58	2.8	11	30	φ6.5	0.0002"
4112-5106-A	2-3"*0.001"	83	2.8	11	42.5	φ6.5	0.00025"
4112-5108-A	3-4"*0.001"	108	2.8	11	55	φ6.5	0.00025"

DIGITAL QUICK-MOVE DISC MICROMETER

DIN 863 | mm/in | SR1620 CR2032 | IP65 COOLANT&FLUID RESISTANT | Data output | WIRELESS TRANSMITTER | Absolute



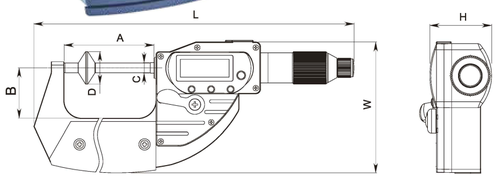

- Used to easily measure root tangent length of spur gears and helical gears
- Stainless steel newly adapted on spindle
- Strictly made in accordance with DIN863
- Spindle thread hardened, ground and lapped for ultimate accuracy
- IP65 protection against liquid
- With Absolute and Metric-Inch Conversion System
- With ratchet stop for constant force

Unit:mm

Code	Range	Resolution	A	B	C	D	L	W	H	Accuracy
4220-2104	0-25/0-1"	0.001/0.00005"	55.3	31	φ6.5	φ20	197.2	80.5	30.8	0.003/0.00015"
4220-2108	25-50/1-2"	0.001/0.00005"	80.3	44	φ6.5	φ20	227.5	96	30.8	0.003/0.00015"
4220-2112	50-75/2-3"	0.001/0.00005"	105.3	56	φ6.5	φ20	257.6	112.5	30.8	0.004/0.00015"

DIGITAL DISC MICROMETER



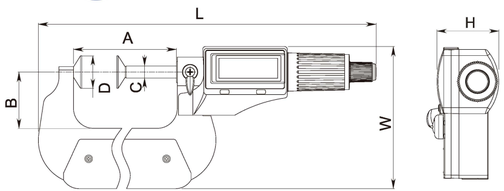

- Used to easily measure root tangent length of spur gears and helical gears
- Stainless steel newly adapted on spindle
- Strictly made in accordance with DIN863
- Spindle thread hardened, ground and lapped for ultimate accuracy
- With Absolute and Metric-Inch Conversion System

Unit:mm

Code	Range	Resolution	A	B	C	D	L	W	H	Accuracy
4110-0005	0-25/0-1"	0.001/0.00005"	55.3	31	φ6.5	φ20	197.2	80.5	30.8	0.003/0.00015"
4110-0010	25-50/1-2"	0.001/0.00005"	80.3	44	φ6.5	φ20	227.5	96	30.8	0.003/0.00015"
4110-0015	50-75/2-3"	0.001/0.00005"	105.3	56	φ6.5	φ20	257.6	112.5	30.8	0.004/0.00015"
4110-0020	75-100/3-4"	0.001/0.00005"	132	66	φ6.5	φ20	269.7	127.8	30.8	0.004/0.00015"

SPLINE MICROMETER

DIN 863



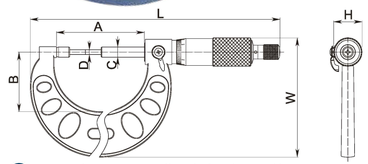

- Used to measure spline shafts, slots and keyways
- Stainless steel newly adapted on spindle
- Strictly made in accordance with DIN863
- Spindle thread hardened, ground and lapped for ultimate accuracy
- Clear graduations laser-etched on satin chrome finish for easy reading
- With ratchet stop for constant force

Unit:mm

Code	Range	Graduation	A	B	C	D	L	W	H	Accuracy
4710-1005	0-25	0.01	56	38	φ6.5	φ3.0	160	76	φ18	0.004/0.00015"
4710-1010	25-50	0.01	81	51	φ6.5	φ3.0	185.5	91	φ18	0.004/0.00015"
4710-1015	50-75	0.01	106	63.5	φ6.5	φ3.0	210.5	105	φ18	0.005/0.0002"
4710-1020	75-100	0.01	131	76	φ6.5	φ3.0	237.3	125	φ18	0.005/0.0002"
4710-2005	0-1"	0.001"	56	38	φ6.5	φ3.0	160	76	φ18	0.004/0.00015"
4710-2010	1-2"	0.001"	81	51	φ6.5	φ3.0	185.5	91	φ18	0.004/0.00015"
4710-2015	2-3"	0.001"	106	63.5	φ6.5	φ3.0	210.5	105	φ18	0.005/0.0002"
4710-2020	3-4"	0.001"	131	76	φ6.5	φ3.0	237.3	125	φ18	0.005/0.0002"
4710-2305	0-1"	0.0001"	56	38	φ6.5	φ3.0	160	76	φ18	0.004/0.00015"
4710-2310	1-2"	0.0001"	81	51	φ6.5	φ3.0	185.5	91	φ18	0.004/0.00015"
4710-2315	2-3"	0.0001"	106	63.5	φ6.5	φ3.0	210.5	105	φ18	0.005/0.0002"
4710-2320	3-4"	0.0001"	131	76	φ6.5	φ3.0	237.3	125	φ18	0.005/0.0002"

DIGITAL SPLINE MICROMETER

DIN 863 | BATTERY CR2032 | mm / in



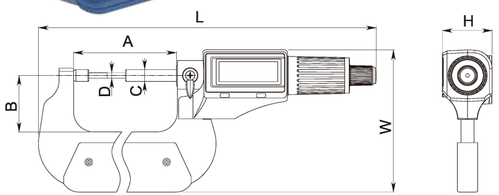

- Used to measure spline shafts, slots and keyways
- Stainless steel newly adapted on spindle
- Strictly made in accordance with DIN863
- Spindle thread hardened, ground and lapped for ultimate accuracy
- With Absolute and Metric-Inch Conversion System
- With ratchet stop for constant force

Unit:mm

Code	Range	Resolution	A	B	C	D	L	W	H	Accuracy
4720-2005	0-25/0-1"	0.001/0.00005"	56.5	31	φ6.5	φ3.0	185.4	77.9	27.3	0.003/0.00015"
4720-2010	25-50/1-2"	0.001/0.00005"	81.5	44	φ6.5	φ3.0	211.9	93.4	27.3	0.003/0.00015"
4720-2015	50-75/2-3"	0.001/0.00005"	107.1	56	φ6.5	φ3.0	239.9	111.4	27.3	0.004/0.00015"
4720-2020	75-100/3-4"	0.001/0.00005"	132	66	φ6.5	φ3.0	269.7	127.8	27.3	0.004/0.00015"

TUBE MICROMETER

DIN 863



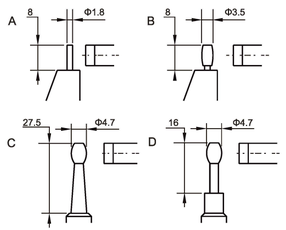

- Strictly made in accordance with DIN863
- Used to measure wall thickness of various tubes
- With Carbide-tipped measuring faces
- With ratchet for constant measuring pressure

Unit:mm

Code	Range	Graduation	Type	Accuracy
4440-1005	0-25	0.01	Anvil Type A	0.006
4440-1010	0-25	0.01	Anvil Type B	0.006
4440-1015	0-25	0.01	Anvil Type C	0.006
4440-1020	0-25	0.01	Anvil Type D	0.006

DIGITAL TUBE MICROMETER

IP65 COOLANT&FLUID RESISTANT | mm / in | BATTERY LR44 | Data output



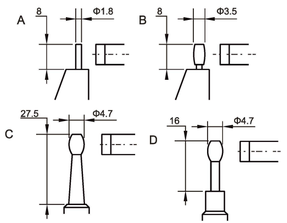

- Strictly made in accordance with DIN863
- Protection level IP65
- For measuring wall thickness of various tubes
- Carbide-tipped measuring faces
- With ratchet for constant measuring pressure

Unit:mm

Code	Range	Resolution	Type	Accuracy
4400-0005	0-25/0-1"	0.001/0.00005"	Anvil Type A	±0.003
4400-0010	0-25/0-1"	0.001/0.00005"	Anvil Type B	±0.003
4400-0015	0-25/0-1"	0.001/0.00005"	Anvil Type C	±0.003
4400-0020	0-25/0-1"	0.001/0.00005"	Anvil Type D	±0.003

SPHERICAL ANVIL TUBE MICROMETER



- S-F : 4510-1005



- S-S : 4330-1005

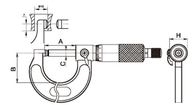

DIN 863

- Used to measure wall thickness of tubes
- Stainless steel newly adapted on spindle
- Strictly made in accordance with DIN863
- Style:
  S-F:Spherical anvil and flat spindle
  S-S:Spherical anvil and spherical spindle
- Spindle thread hardened, ground and lapped for ultimate accuracy
- Clear graduations laser-etched on satin chrome finish for easy reading
- With ratchet stop for constant force

Unit:mm

Code	Range	Graduation	A	B	C	H	Style	Accuracy
4510-1005	0-25	0.01	31	29.5	φ6.5	φ18	S-F	0.004
4510-1010	25-50	0.01	56	38	φ6.5	φ18	S-F	0.004
4510-1015	50-75	0.01	81	51	φ6.5	φ18	S-F	0.005
4510-1020	75-100	0.01	106	63.5	φ6.5	φ18	S-F	0.005
4510-2005	0-1"	0.001"	31	29.5	φ6.5	φ18	S-F	0.004
4510-2010	1-2"	0.001"	56	38	φ6.5	φ18	S-F	0.004
4510-2015	2-3"	0.001"	81	51	φ6.5	φ18	S-F	0.005
4510-2020	3-4"	0.001"	106	63.5	φ6.5	φ18	S-F	0.005
4510-2305	0-1"	0.0001"	31	29.5	φ6.5	φ18	S-F	0.004
4510-2310	1-2"	0.0001"	56	38	φ6.5	φ18	S-F	0.004
4510-2315	2-3"	0.0001"	81	51	φ6.5	φ18	S-F	0.005
4510-2320	3-4"	0.0001"	106	63.5	φ6.5	φ18	S-F	0.005
4330-1005	0-25	0.01	32	24	φ6.5	φ18	S-S	0.004
4330-1010	25-50	0.01	57	32	φ6.5	φ18	S-S	0.004
4330-1015	50-75	0.01	82	45	φ6.5	φ18	S-S	0.005
4330-1020	75-100	0.01	107	57	φ6.5	φ18	S-S	0.005

DIGITAL SPHERICAL ANVIL TUBE MICROMETER



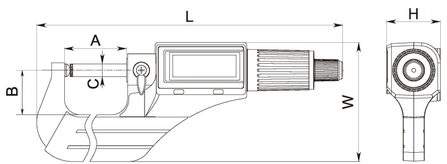

- Used to measure wall thickness of tubes
- Strictly made in accordance with DIN863
- Spindle thread hardened, ground and lapped for ultimate accuracy
- With Absolute and Metric-Inch Conversion System

Unit:mm

Code	Range	Resolution	A	B	C	L	W	H	Accuracy
4520-2005	0-25/0-1"	0.001/0.00005"	31.5	22.5	φ6.5	155	60.2	27.3	0.003/0.00015"
4520-2010	25-50/1-2"	0.001/0.00005"	56.5	31	φ6.5	185.4	77.9	27.3	0.003/0.00015"
4520-2015	50-75/2-3"	0.001/0.00005"	81.5	44	φ6.5	211.9	93.4	27.3	0.004/0.00015"
4520-2020	75-100/3-4"	0.001/0.00005"	107.1	56	φ6.5	239.9	111.4	27.3	0.004/0.00015"
4520-3405	0-25/0-1"	0.001/0.00005"	31.5	22.5	φ6.5	155	60.2	27.3	0.003/0.00015"
4520-3410	25-50/1-2"	0.001/0.00005"	56.5	31	φ6.5	185.4	77.9	27.3	0.003/0.00015"
4520-3415	50-75/2-3"	0.001/0.00005"	81.5	44	φ6.5	211.9	93.4	27.3	0.004/0.00015"
4520-3420	75-100/3-4"	0.001/0.00005"	107.1	56	φ6.5	239.9	111.4	27.3	0.004/0.00015"

POINT MICROMETER



- S-S : 4610-1405 SR0.3
- F-F : 4610-1005 Φ0.5

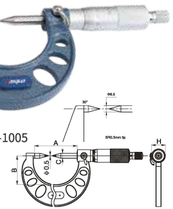

DIN 863

- Used to measure the web thickness of drills, small grooves and other hard to reach dimensions
- Stainless steel newly adapted on spindle
- Strictly made in accordance with DIN863
- Spindle thread hardened, ground and lapped for ultimate accuracy
- Clear graduations laser-etched on satin chrome finish for easy reading
- With ratchet stop for constant force
- Style:
  F-F:Flat Anvil and Flat Spindle
  S-S:Spherical Anvil and Spherical Spindle

Unit:mm

Code	Range	Graduation	A	B	C	H	Style	Accuracy
4610-1005	0-25	0.01	56	38	φ6.5	φ18	F-F	0.004
4610-1010	25-50	0.01	81	51	φ6.5	φ18	F-F	0.004
4610-1015	50-75	0.01	106	63.5	φ6.5	φ18	F-F	0.005
4610-1020	75-100	0.01	131	76	φ6.5	φ18	F-F	0.005
4610-1405	0-25	0.01	57	32	φ6.5	φ18	S-S	0.004
4610-1410	25-50	0.01	82	45	φ6.5	φ18	S-S	0.004
4610-1415	50-75	0.01	107	57	φ6.5	φ18	S-S	0.005
4610-1420	75-100	0.01	133	70	φ6.5	φ18	S-S	0.005
4610-2005	0-1"	0.001"	56	38	φ6.5	φ18	F-F	0.004
4610-2010	1-2"	0.001"	81	51	φ6.5	φ18	F-F	0.004
4610-2015	2-3"	0.001"	106	63.5	φ6.5	φ18	F-F	0.005
4610-2020	3-4"	0.001"	131	76	φ6.5	φ18	F-F	0.005
4610-2305	0-1"	0.0001"	56	38	φ6.5	φ18	F-F	0.004
4610-2310	1-2"	0.0001"	81	51	φ6.5	φ18	F-F	0.004
4610-2315	2-3"	0.0001"	106	63.5	φ6.5	φ18	F-F	0.005
4610-2320	3-4"	0.0001"	131	76	φ6.5	φ18	F-F	0.005

DIGITAL POINT MICROMETER



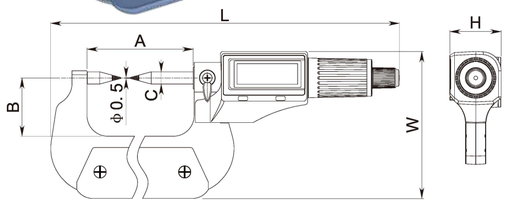

- Used to measure the web thickness of drills, small grooves and other hard to reach dimensions
- Stainless steel newly adapted on spindle
- Strictly made in accordance with DIN863
- Spindle thread hardened, ground and lapped for ultimate accuracy
- With Absolute and Metric-Inch Conversion System
- With ratchet stop for constant force

Unit:mm

Code	Range	Resolution	A	B	C	L	W	H	Accuracy
4620-2005	0-25/0-1"	0.001/0.00005"	56.5	31	φ6.5	185.4	77.9	φ27.3	0.003/0.00015"
4620-2010	25-50/1-2"	0.001/0.00005"	81.5	44	φ6.5	211.9	93.4	φ27.3	0.003/0.00015"
4620-2015	50-75/2-3"	0.001/0.00005"	107.1	56	φ6.5	239.9	111.4	φ27.3	0.004/0.00015"
4620-2020	75-100/3-4"	0.001/0.00005"	132	66	φ6.5	269.7	127.8	φ27.3	0.004/0.00015"

BLADE MICROMETER

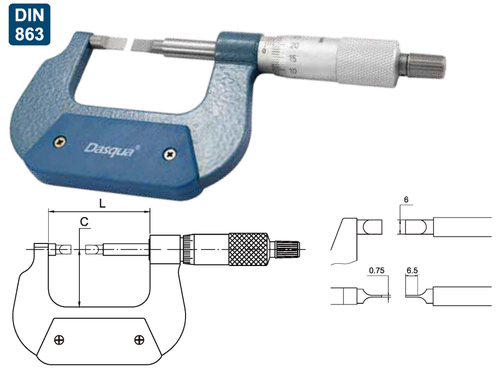

- Used to measure non-rotating spindle with blade type measuring face
- Stainless steel newly adapted on spindle
- Strictly made in accordance with DIN863
- Spindle thread hardened, ground and lapped for ultimate accuracy

Unit:mm

Code	Range	Graduation	C	L
4570-1005	0-25	0.01	32	57
4570-1010	25-50	0.01	45	82
4570-1015	50-75	0.01	57	107
4570-1020	75-100	0.01	70	133
4570-1025	100-125	0.01	82	159
4570-1030	125-150	0.01	95	184
4570-2005	0-1"-0.001"	0.001"	32	57
4570-2010	1-2"-0.001"	0.001"	45	82
4570-2015	2-3"-0.001"	0.001"	57	107
4570-2020	3-4"-0.001"	0.001"	70	133
4570-2025	4-5"-0.001"	0.001"	82	159
4570-2030	5-6"-0.001"	0.001"	95	184

DIGITAL QUICK-MOVE BLADE MICROMETER

mm/in · DIN 863 · WIRELESS TRANSMITTER · Data output · IP65 COOLANT&FLUID RESISTANT · Absolute · BATTERY CR2032



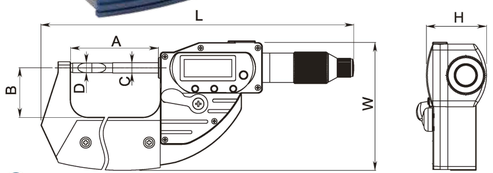

- Used to measure non-rotating spindle with blade type measuring face
- Stainless steel newly adapted on spindle
- Strictly made in accordance with DIN863
- Spindle thread hardened, ground and lapped for ultimate accuracy
- With Absolute and Metric-Inch Conversion System
- With ratchet stop for constant force

Unit:mm

Code	Range	Resolution	A	B	C	D	L	W	H	Accuracy
4220-2103	0-25/0-1"	0.001/0.00005"	55.3	31	φ6.5	φ6	197.2	80.5	30.8	0.003/0.00015"
4220-2106	25-50/1-2"	0.001/0.00005"	80.3	44	φ6.5	φ6	227.5	96	44	0.003/0.00015"
4220-2109	50-75/2-3"	0.001/0.00005"	105.3	56	φ6.5	φ6	257.6	112.5	56	0.004/0.00015"

DIGITAL BLADE MICROMETER

DIN 863 · BATTERY CR2032 · mm/in



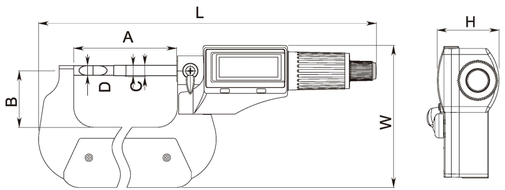

- Used to measure non-rotating spindle with blade type measuring face
- Stainless steel newly adapted on spindle
- Strictly made in accordance with DIN863
- Spindle thread hardened, ground and lapped for ultimate accuracy
- With Absolute and Metric-Inch Conversion System

Unit:mm

Code	Range	Resolution	A	B	C	D	L	W	H	Accuracy
4570-3005	0-25/0-1"	0.001/0.00005"	55.3	31	φ6.5	φ6	197.2	80.5	30.8	0.003/0.00015"
4570-3010	25-50/1-2"	0.001/0.00005"	80.3	44	φ6.5	φ6	227.5	96	30.8	0.003/0.00015"
4570-3015	50-75/2-3"	0.001/0.00005"	105.3	56	φ6.5	φ6	257.6	112.5	30.8	0.004/0.00015"
4570-3020	75-100/3-4"	0.001/0.00005"	132	66	φ6.5	φ6	269.7	127.8	30.8	0.004/0.00015"

GEAR MICROMETER

DIN 863



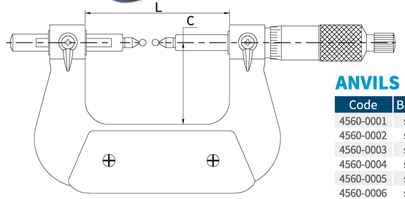

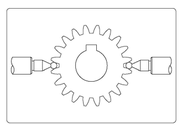

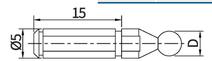

ANVILS

Code	Ball dia.(D)	Module	Dia. Pitch	Remark
4560-0001	sφ1.0mm	0.6-0.65	45	anvil available for both mechanical and digital
4560-0002	sφ1.5mm	0.9-1.0	28-26	
4560-0003	sφ2.0mm	1.25	22	
4560-0004	sφ2.5mm	1.5	17	
4560-0005	sφ3.0mm	1.75	15	
4560-0006	sφ3.5mm	2	13	
4560-0007	sφ4.0mm	2.25	11	
4560-0008	sφ4.5mm	2.5	10	
4560-0009	sφ5.0mm	2.75	9	
4560-0010	sφ6.0mm	3.5	7	
4560-0011	Set Including all above			

- Strictly made in accordance with DIN863
- Interchangeable ball tips for various gear modules (0.6~3.5) are optional
- With ratchet for constant measuring pressure

Unit:mm

Code	Range	Graduation	C	L	Accuracy
4550-1005	0-25	0.01	38	67	0.004
4550-1010	25-50	0.01	50	92	0.004
4550-1015	50-75	0.01	62	118	0.005
4550-1020	75-100	0.01	70	143	0.005
4550-1025	100-125	0.01	82	168	0.006
4550-1030	125-150	0.01	95	192	0.006

DIGITAL GEAR MICROMETER

IP65 COOLANT&FLUID RESISTANT · mm/in · BATTERY LR44 · Data output



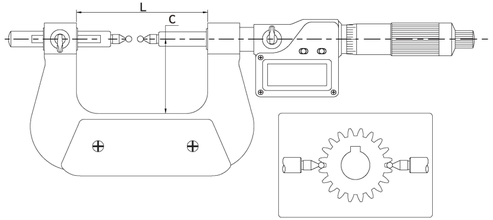

- Strictly made in accordance with DIN863
- Used to measure over-pin diameter of external gears
- Interchangeable ball tips for various gear modules (0.6~3.5) are optional.
- IP65 protection against liquid
- With ratchet for constant measuring pressure

Unit:mm

Code	Range	Resolution	C	L	Accuracy
4570-0005	0-25/0-1"	0.001/0.00005"	38	67	±0.002
4570-0010	25-50/1-2"	0.001/0.00005"	50	92	±0.002
4570-0015	50-75/2-3"	0.001/0.00005"	62	118	±0.003
4570-0020	75-100/3-4"	0.001/0.00005"	70	143	±0.003
4570-0025	100-125/4-5"	0.001/0.00005"	82	168	±0.003
4570-0030	125-150/5-6"	0.001/0.00005"	95	192	±0.003

DISK BRAKE MICROMETER

DIN 863



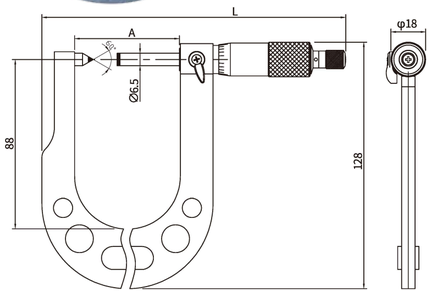

- Strictly made in accordance with DIN863
- To measure brake disc thickness in car
- With carbide measuring face
- With ratchet for constant measuring force

Unit:mm

Code	Range	Graduation	A	L	Accuracy
4521-0005	7-32	0.01	44.5	148	0.004
4521-0010	10-45	0.01	54.5	158	0.004

DIGITAL DISK BRAKE MICROMETER

mm/in

BATTERY CR2032



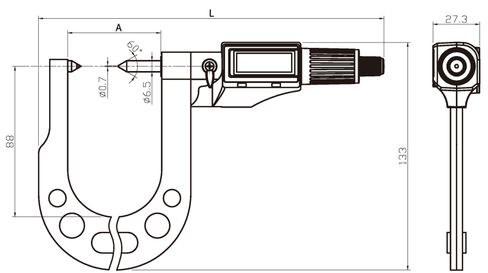

- Strictly made in accordance with DIN863
- With incremental capacity measurement system
- With carbide measurement surface
- Adapt to measuring the dimension that is not easy to measure

Unit:mm

Code	Range	Resolution	A	L	Accuracy
4520-1005	7-32/0.3-1.3"	0.001/0.00005"	44.5	192	0.004/0.0002"
4520-1010	18-43/0.7-1.7"	0.001/0.00005"	54.5	202	0.004/0.0002"

SHEET METAL MICROMETER

DIN 863

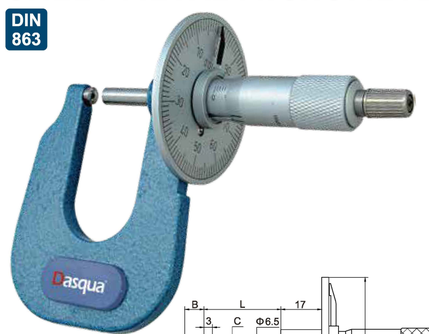

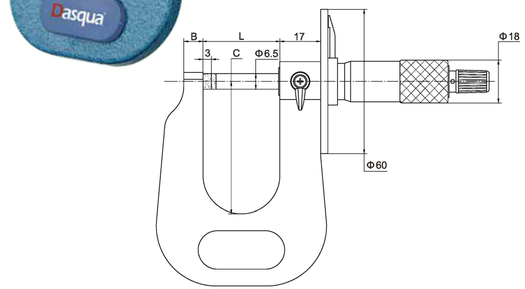

- Strictly made in accordance with DIN863
- A dial is attached to the sleeve for making easy and quick reading of sheet metal thickness
- With carbide measuring face
- With ratchet for constant measuring force

Unit:mm

Code	Range	Graduation	L	B	C	Accuracy
4731-0005	0-15	0.01	22	8	50	0.004
4731-0010	0-25	0.01	32	8	50	0.004
4731-0015	0-50	0.01	57	12	100	0.005

SHEET METAL MICROMETER

DIN 863



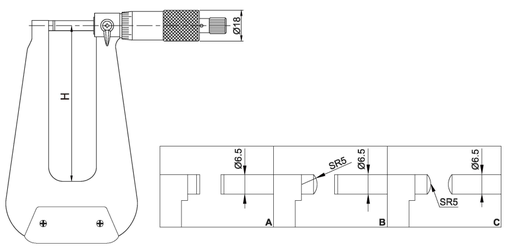

- Strictly made in accordance with DIN863
- Deep throat frame for measuring thickness of sheet metal, paper, plastic and rubber parts
- With carbide measuring face
- With ratchet for constant measuring force

Unit:mm

Code	Range	Graduation	H	Style	Accuracy
4561-1005	0-25	0.01	150	A	0.006
4561-1010	0-25	0.01	150	B	0.006
4561-1015	0-25	0.01	150	C	0.006
4561-1020	0-25	0.01	300	B	0.007

DIGITAL SHEET METAL MICROMETER

IP65 COOLANT&FLUID RESISTANT | mm/in | BATTERY + LR44 | Data output

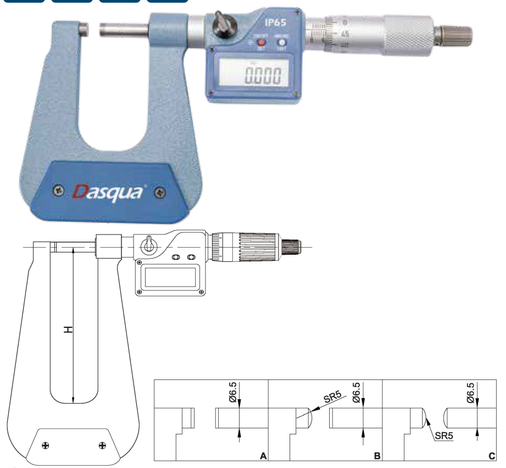

- Strictly made in accordance with DIN863
- Deep throat frame for measuring thickness of sheet metal, paper,plastic, and rubber parts
- With carbide measuring face
- With ratchet for constant measuring pressure
- IP65 protection against liquid

Unit:mm

Code	Range	Resolution	H	Style	Accuracy
4560-4005	0-25/0-1"	0.001/0.00005"	150	A	±0.003
4560-4010	0-25/0-1"	0.001/0.00005"	150	B	±0.003
4560-4015	0-25/0-1"	0.001/0.00005"	150	C	±0.003
4560-4020	0-25/0-1"	0.001/0.00005"	300	B	±0.004

SCREW THREAD MICROMETER

NON-ROTATING SPINDLE TYPE

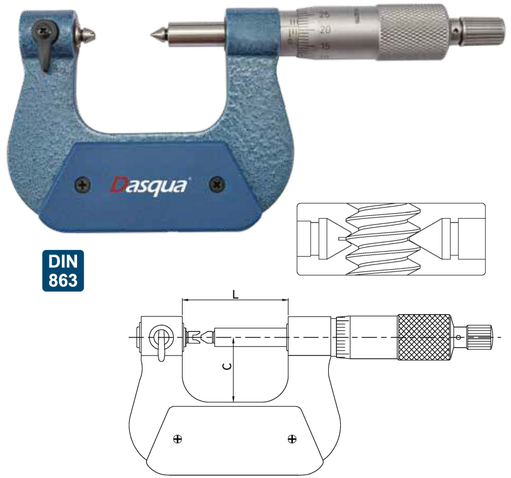

DIN 863

- Strictly made in accordance with DIN863
- Used for external thread measurements
- 60°or 55° V-shaped and con-shaped anvils (interchangeable) are available
- Dimension of anvil-tail: Φ5X15mm
- With ratchet for constant measuring pressure
- Without screw thread heads, which can be found and ordered in page 68

Unit:mm

Code	Range	Graduation	L	C	Accuracy
4157-4005	0-25	0.01	42	26	0.004
4157-4010	25-50	0.01	67	38	0.004
4157-4015	50-75	0.01	92	50	0.005
4157-4020	75-100	0.01	118	62	0.005

DIGITAL SCREW THREAD MICROMETER

NON-ROTATING SPINDLE TYPE

IP65 COOLANT&FLUID RESISTANT | mm/in | BATTERY + LR44 | Data output | DIN 863

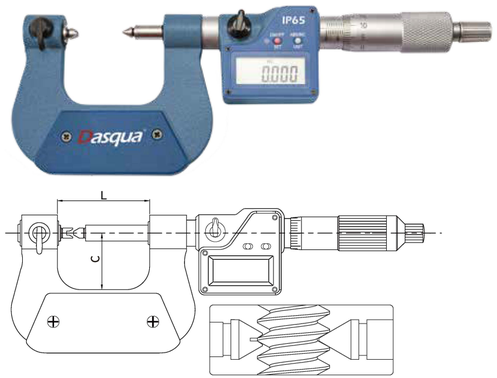

- Strictly made in accordance with DIN863
- Used for external thread measurements
- 60°or 55° V-shaped and con-shaped anvils (interchangeable) are available
- With ratchet for constant measuring pressure
- Protection level IP65
- Without screw thread heads, which can be found and ordered in page 68

Unit:mm

Code	Range	Graduation	L	C	Accuracy
4127-0005	0-25/0-1"	0.001/0.00005"	42	26	±0.002
4127-0010	25-50/1-2"	0.001/0.00005"	67	38	±0.002
4127-0015	50-75/2-3"	0.001/0.00005"	92	50	±0.002
4127-0020	75-100/4-5"	0.001/0.00005"	118	62	±0.003

TUBULAR INSIDE SCREW THREAD MICROMETER



- Operating and display units antiglare with satin chrome finish
- Measuring head and End piece with mounting bore for interchangeable anvils
- Rigid, lightweight tubular construction
- Interchangeable extensions with cylindrical gauge rods which are spring-mounted in protective sleeve for the extension of the measuring range
- Protection sleeve have a satin chrome finish
- Without screw thread heads, which can be found and ordered in page 68

Unit:mm

Code	Range	Graduation	Accuracy
4321-0001	75-100	0.01	0.03
4321-0002	100-125	0.01	0.03
4321-0003	125-150	0.01	0.03
4321-0004	150-175	0.01	0.03
4321-0005	175-200	0.01	0.04
4321-0006	200-225	0.01	0.04
4321-0007	225-250	0.01	0.04
4321-0008	250-275	0.01	0.04
4321-0009	275-300	0.01	0.05

HEAD OF SCREW THREAD MICROMETER



Unit:mm

Code	Thread type	Pitch	Remark
4560-6001	Metric 60°	0.4-0.5/64-48TPI	anvil available for: 4157-4005 4157-4010 4157-4015 4157-4020 4127-0005 4127-0010 4127-0015 4127-0020 4321-0001 4321-0002 4321-0003 4321-0004 4321-0005 4321-0006 4321-0007 4321-0008 4321-0009
4560-6002	Metric 60°	0.6-0.9/44-28TPI	
4560-6003	Metric 60°	1-1.75/24-14TPI	
4560-6004	Metric 60°	2-3/13-9TPI	
4560-6005	Metric 60°	3.5-5/8-5TPI	
4560-6006	Metric 60°	5.5-7/4.5-3.5TPI	
4560-5501	Withworth 55°	60-48TPI	
4560-5502	Withworth 55°	48-40TPI	
4560-5503	Withworth 55°	40-32TPI	
4560-5504	Withworth 55°	32-24TPI	
4560-5505	Withworth 55°	24-18TPI	
4560-5506	Withworth 55°	18-14TPI	
4560-5507	Withworth 55°	14-10TPI	
4560-5508	Withworth 55°	10-7TPI	
4560-5509	Withworth 55°	7-4.5TPI	
4560-5510	Withworth 55°	4.5-3.5TPI	

PITCH DIAMETER GAUGE

- Designed to be suspended over a test specimen; Pin gauges are the most reliable tools for measuring the pitch diameter of external thread, which is the most important dimension in a screw thread.
- A set is consisting of 3 pin gauges



Unit:mm

Code		Size	Code		Size	Code		Size
Grade 0 ± 0.00025	Grade 1 ± 0.0005		Grade 0 ± 0.00025	Grade 1 ± 0.0005		Grade 0 ± 0.00025	Grade 1 ± 0.0005	
4090-7730	4091-5510	φ0.118	4090-7747	4091-5527	φ1.008	4090-7765	4091-5545	φ3.177
4090-7731	4091-5511	φ0.142	4090-7748	4091-5528	φ1.047	4090-7766	4091-5546	φ3.287
4090-7732	4091-5512	φ0.170	4090-7749	4091-5529	φ1.157	4090-7767	4091-5547	φ3.310
4090-7733	4091-5513	φ0.185	4090-7750	4091-5530	φ1.302	4090-7768	4091-5548	φ3.550
4090-7782	4091-5562	φ0.210	4090-7751	4091-5531	φ1.411	4090-7769	4091-5549	φ3.580
4090-7734	4091-5514	φ0.232	4090-7752	4091-5532	φ1.553	4090-7770	4091-5550	φ3.666
4090-7735	4091-5515	φ0.250	4090-7753	4091-5533	φ1.591	4090-7771	4091-5551	φ4.091
4090-7736	4091-5516	φ0.260	4090-7754	4091-5534	φ1.732	4090-7772	4091-5552	φ4.120
4090-7737	4091-5517	φ0.291	4090-7755	4091-5535	φ1.833	4090-7773	4091-5553	φ4.141
4090-7738	4091-5518	φ0.343	4090-7756	4091-5536	φ2.020	4090-7774	4091-5554	φ4.211
4090-7739	4091-5519	φ0.402	4090-7757	4091-5537	φ2.050	4090-7775	4091-5555	φ4.400
4090-7740	4091-5520	φ0.433	4090-7758	4091-5538	φ2.071	4090-7776	4091-5556	φ4.773
4090-7741	4091-5521	φ0.461	4090-7759	4091-5539	φ2.217	4090-7777	4091-5557	φ5.150
4090-7742	4091-5522	φ0.511	4090-7760	4091-5540	φ2.311	4090-7778	4091-5558	φ5.176
4090-7743	4091-5523	φ0.572	4090-7761	4091-5541	φ2.595	4090-7779	4091-5559	φ5.493
4090-7744	4091-5524	φ0.724	4090-7762	4091-5542	φ2.866	4090-7780	4091-5560	φ6.212
4090-7745	4091-5525	φ0.796	4090-7763	4091-5543	φ2.886	4090-7781	4091-5561	φ6.585
4090-7746	4091-5526	φ0.866	4090-7764	4091-5544	φ3.106			

V-ANVIL MICROMETER

DIN 863

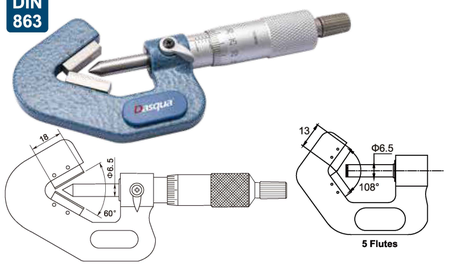

- Strictly made in accordance with DIN863
- Used to measure the outside diameter of cutting tools (such as taps, reamers, end mills) with an odd number of flutes.
- V-anvils with a centerline groove are available. They are useful for measuring pitch diameters of taps which have a small diameter by using single-wire method.
- With carbide measuring face
- Ratchet stop for constant force

Unit:mm

Code	Range	Graduation	Ratchet stop	Accuracy
4471-0005	1-15	0.01	3 Flutes	0.004
4471-0010	5-20	0.01	3 Flutes	0.004
4471-0015	20-35	0.01	3 Flutes	0.005
4471-0020	35-50	0.01	3 Flutes	0.005
4471-0025	50-65	0.01	3 Flutes	0.006
4471-0030	65-80	0.01	3 Flutes	0.006
4471-0035	80-95	0.01	3 Flutes	0.007
4471-0040	2.3-25	0.01	3 Flutes	0.004
4471-0045	25-50	0.01	3 Flutes	0.005
4471-0050	5-25	0.01	5 Flutes	0.004
4471-0055	25-45	0.01	5 Flutes	0.005
4471-0060	45-65	0.01	5 Flutes	0.006
4471-0065	65-85	0.01	5 Flutes	0.007
4471-0070	85-105	0.01	5 Flutes	0.008

IP65 WATER PROOF DIGITAL V-ANVIL MICROMETER

- Strictly made in accordance with DIN863
- Measuring diameter of cylinder with an odd number flutes, such as taps, reamers and end mills
- With carbide measuring face
- With ratchet for constant measuring pressure
- IP65 protection against liquid

mm/in | BATTERY + LR44 | Data output | DIN 863 | IP65 COOLANT&FLUID RESISTANT

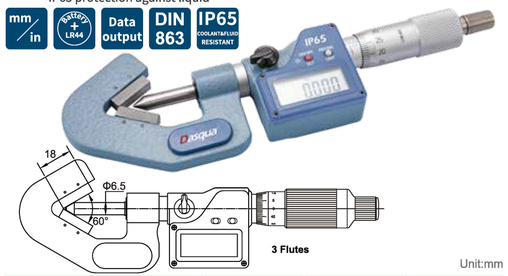

Unit:mm

Code	Range	Resolution	Ratchet stop	Accuracy
4470-0005	1-15	0.001/0.00005"	3 Flutes	±0.002
4470-0010	5-20	0.001/0.00005"	3 Flutes	±0.002
4470-0015	20-35	0.001/0.00005"	3 Flutes	±0.003
4470-0020	35-50	0.001/0.00005"	3 Flutes	±0.003
4470-0025	50-65	0.001/0.00005"	3 Flutes	±0.003
4470-0030	65-80	0.001/0.00005"	3 Flutes	±0.003
4470-0035	80-95	0.001/0.00005"	3 Flutes	±0.004
4470-0040	2.3-25	0.001/0.00005"	3 Flutes	±0.002
4470-0045	25-50	0.001/0.00005"	3 Flutes	±0.003
4470-0050	5-25	0.001/0.00005"	5 Flutes	±0.002
4470-0055	25-45	0.001/0.00005"	5 Flutes	±0.003
4470-0060	45-65	0.001/0.00005"	5 Flutes	±0.003
4470-0065	65-85	0.001/0.00005"	5 Flutes	±0.004
4470-0070	85-105	0.001/0.00005"	5 Flutes	±0.004

LIMIT MICROMETER

- Used as a go/no-go gage by setting the upper and lower limits
- Provided with a standard bar for 25mm- 50mm model
- With carbide measuring face
- Ratchet stop for constant force

Unit:mm

Code	Range	Graduation	A	L	C	Accuracy
4920-0005	0-25	0.002	12	32	24	0.003
4920-0010	25-50	0.002	15	57	32	0.003
4920-0015	0-1"	0.0001"	12	32	24	0.00012"
4920-0020	1-2"	0.0001"	15	57	32	0.00012"



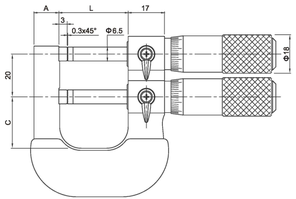

WIRE MICROMETER

Unit:mm

Code	Range	Graduation	Accuracy
4631-0005	0-10	0.01	0.004

- Strictly made in accordance with DIN863
- Used to measure the diameter of wire or small ball
- With finely ground carbide face
- With ratchet for constant measuring force

DIN 863



GROOVE MICROMETER

- Strictly made in accordance with DIN863
- Flanged measuring faces for measuring width, depth, and location of grooves inside bores
- With non-rotating spindle
- Provided with 2 types of laser engraved graduations for inside and outside measurement

DIN 863

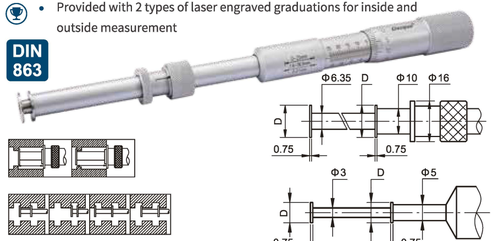

Unit:mm

Code	Range	Graduation	Parallelism	D	Accuracy
4861-0005	0-25	0.01	0.01	φ6.5	0.01
4861-0010	25-50	0.01	0.01	φ13	0.01
4861-0015	50-75	0.01	0.01	φ13	0.01
4861-0020	75-100	0.01	0.01	φ13	0.01

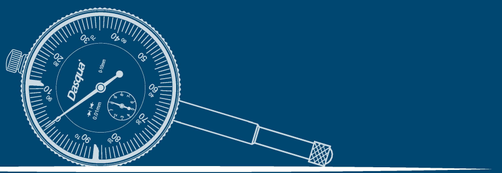

INDICATOR

BORN IN ITALY, RAISED BY THE WORLD

DIAL INDICATOR PRIME DIN 878

WITH 0.001MM GRADUATION

- Made in Germany
- Used to measure surface flatness, check tool set-up and squareness
- Knurled top screw or lifting cap to raise the plunger easily
- With adjustable limit hands to set tolerance
- O-Ring sealed between inner and outer lid to protect from water or oil

Made in Europe



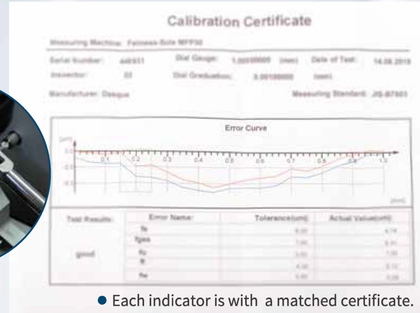

- Each indicator is with a matched certificate.

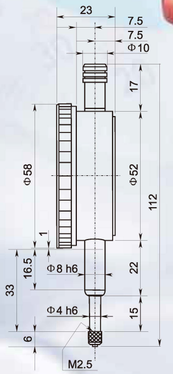



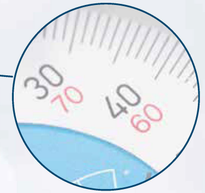

- Double figures in different colors for easy and correct reading

- Measuring rod nearly does not wobble. Both the sleeve reamed hole and measuring rod are very smooth when gripped.



Unit:mm

Code	Range	Graduation	Accuracy	Hysteresis	Range/Rev	Reading	Housing Diameter
5181-0005-A	0-1	0.001	0.005	0.002	0.2	0-100-0	φ58

DIAL INDICATOR

DIN 878



- 5111-0000 Metric Dial indicator

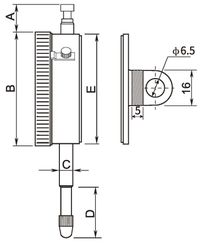

- 5111-0000



- 5122-4205 Inch Size Dial indicator

Unit:mm

Code	Range	Graduation	Style	A	B	C	D	E	Accuracy	Hysteresis
5111-0000	0-10	0.01	flat back	10.5	φ58	φ8	20.5	φ53.5	0.017	0.003
5111-1005	0-10	0.01	lug back	10.5	φ58	φ8	20.5	φ53.5	0.017	0.003

INCH SIZE DIAL INDICATOR

Unit:mm

Code	Range	Graduation	Style	Protection Standard
5122-4205	0-0.5"	0.0005"	lug back	No Jeweled Bearing
5122-4225	0-0.5"	0.0005"	lug back	Jeweled Bearing
5122-4210	0-1"	0.001"	lug back	No Jeweled Bearing
5122-4220	0-1"	0.001"	lug back	Jeweled Bearing
5122-4230	0-1"	0.0005"	lug back	No Jeweled Bearing
5122-4235	0-1"	0.0005"	lug back	Jeweled Bearing
5122-4214	0-2"	0.001"	lug back	No Jeweled Bearing
5122-4215	0-2"	0.001"	lug back	Jeweled Bearing

DIAL INDICATOR

WITH CALIBRATION CERTIFICATE

DIN 878



- Used to measure surface flatness as well as axial runout and also used to check tool set up and squareness
- Limit indicator clips included
- Strictly made in accordance with DIN878
- Jeweled bearings providing the lowest possible bearing friction
- With narrowed range and higher accuracy

Unit:mm

Code	Range	Graduation	Style	A	B	C	D	E	Accuracy	Hysteresis
5111-1105	0-10	0.01	flat back	8	φ58	φ8	18.5	φ55	0.017	0.003
5111-1205	0-10	0.01	lug back	8	φ58	φ8	18.5	φ55	0.017	0.003

DIAL INDICATOR

SHOCK-PROOF DIN 878

WITH SHOCK RESISTANT ABILITY

Unit:mm

Code	Range	Graduation	Style	A	B	C	D	L	Accuracy	Hysteresis
5121-1105	0-10	0.01	Flat back	8	φ58	φ8	18.5	φ55	0.017	0.003
5121-1205	0-10	0.01	Lug back	8	φ58	φ8	18.5	φ55	0.017	0.003



- Jeweled bearing can reduce the friction, making higher sensitivity and quick response ability.

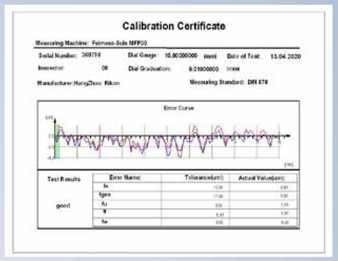

Each indicator is with a matched certificate

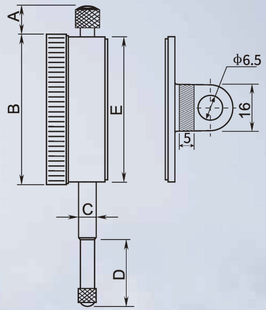

- Oxidation treatment has been given on gear,rack,clamping piece and clamping plate.

- Measuring rod nearly does not wobble. Both the sleeve reamed hole and measuring rod are very smooth when gripped.

MINI DIAL INDICATOR

SHOCK-PROOF DIN 878

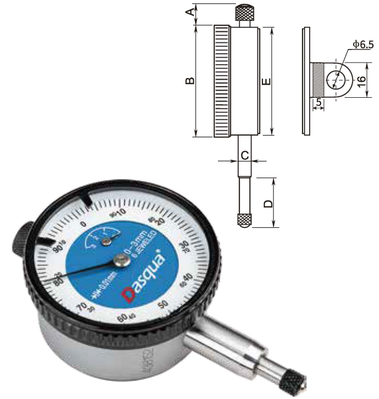

- With calibration certificate
- Used to measure surface flatness as well as axial runout and also used to check tool set up and squareness
- Limit indicator clips included
- Strictly made in accordance with DIN878
- Jeweled bearings providing the lowest possible bearing friction
- With narrowed range and higher accuracy

Unit:mm

Code	Range	Graduation	Style	A	B	C	D	E	Accuracy	Hysteresis
5121-1101	0-3	0.01	flat back	6.5	φ40	φ8	10.6	φ36	0.012	0.003
5121-1201	0-3	0.01	lug back	6.5	φ40	φ8	10.6	φ36	0.012	0.003
5121-1102	0-5	0.01	flat back	6.5	φ40	φ8	12.5	φ36	0.014	0.003
5121-1202	0-5	0.01	lug back	6.5	φ40	φ8	12.5	φ36	0.014	0.003

DIAL INDICATOR

WITH 0.001MM GRADUATION

DIN 878 SHOCK-PROOF

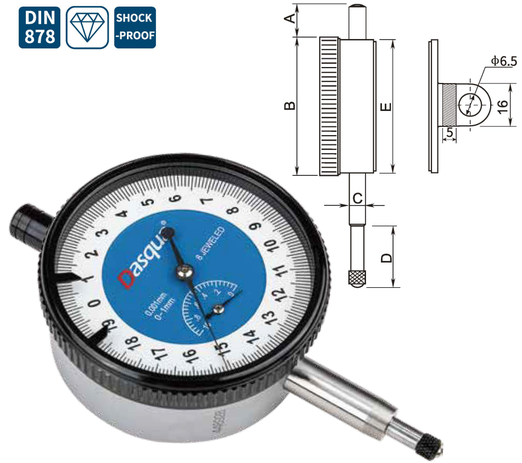

- With calibration certificate
- Used to measure surface flatness as well as axial runout and also used to check tool set up and squareness
- Limit indicator clips included
- Strictly made in accordance with DIN878
- Jeweled bearings providing the lowest possible bearing friction
- With narrowed range and higher accuracy

Unit:mm

Code	Range	Graduation	Style	A	B	C	D	E	Accuracy	Hysteresis
5121-2101	0-1	0.001	flat back	13	φ58	φ8	12	φ55	0.005	0.002
5121-2201	0-1	0.001	lug back	13	φ58	φ8	12	φ55	0.005	0.002

WATER PROOF INDICATOR

DIN 878 | SHOCK-PROOF | Water proof

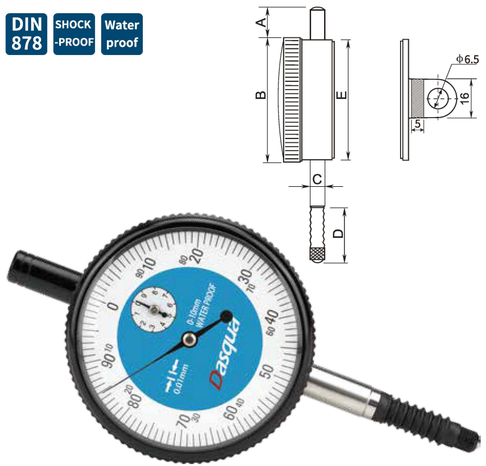

- Used to measure surface flatness as well as axial runout and also used to check tool set up and squareness
- Strictly made in accordance with DIN878
- O-ring seal on safety cap for bezel and rotating dial
- Hardened gears-lasting against indicator failure due to shock or wear

Unit:mm

Code	Range	Graduation	Style	A	B	C	D	E	Accuracy	Hysteresis	Protection Standard
5121-1106	0-10	0.01	flat back	16.5	φ58	φ8	27	φ53.5	0.017	0.003	IP54
5121-1107	0-10	0.01	lug back	16.5	φ58	φ8	27	φ53.5	0.017	0.003	IP54
5121-2106	0-1	0.001	flat back	10.5	φ63	φ8	21	φ55	0.005	0.002	IP67 Jeweled
5121-2107	0-1	0.001	lug back	10.5	φ63	φ8	21	φ55	0.005	0.002	IP67 Jeweled

DIAL INDICATOR

WITH LARGE MEASURING RANGE

DIN 878

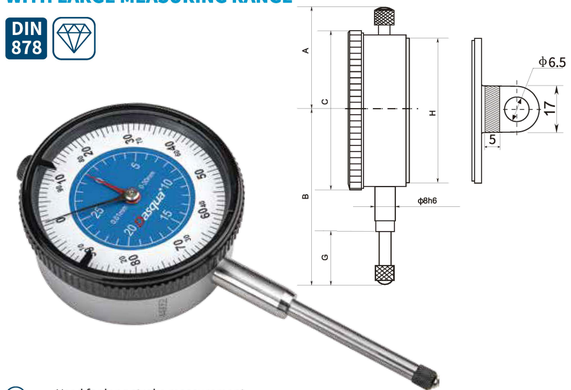

- Used for long stroke measurement
- Limit indicator clips included
- Strictly made in accordance with DIN878
- Jeweled bearings providing the lowest possible bearing friction
- With larger range than normal indicators

Unit:mm

Code	Range	Graduation	Style	A	B	C	G	H	Accuracy	Hysteresis	Protection Standard
5131-4405	0-25	0.01	flat back	37.5	80.5	φ58	34	φ53.5	0.035	0.007	No Jeweled Bearing
5132-7105	0-25	0.01	lug back	37.5	80.5	φ58	34	φ53.5	0.035	0.007	No Jeweled Bearing
5141-1105	0-30	0.01	flat back	37.5	89.5	φ58	40.9	φ53.5	0.035	0.007	No Jeweled Bearing
5141-2105	0-30	0.01	lug back	37.5	89.5	φ58	40.9	φ53.5	0.035	0.007	No Jeweled Bearing
5121-1110	0-30	0.01	flat back	37.5	89.5	φ58	40.9	φ53.5	0.035	0.007	Jeweled Bearing
5121-1210	0-30	0.01	lug back	37.5	89.5	φ58	40.9	φ53.5	0.035	0.007	Jeweled Bearing
5121-1115	0-50	0.01	flat back	108.3	126.2	φ58	57.7	φ53.5	0.04	0.008	Jeweled Bearing
5121-1215	0-50	0.01	lug back	108.3	126.2	φ58	57.7	φ53.5	0.04	0.008	Jeweled Bearing
5121-1125	0-80	0.01	flat back	138.4	168.4	φ58	88	φ53.5	0.05	0.009	Jeweled Bearing
5121-1225	0-80	0.01	lug back	138.4	168.4	φ58	88	φ53.5	0.05	0.009	Jeweled Bearing
5121-1120	0-100	0.01	flat back	167.6	207.8	φ78	108	φ69	0.05	0.009	Jeweled Bearing
5121-1220	0-100	0.01	lug back	167.6	207.8	φ78	108	φ69	0.05	0.009	Jeweled Bearing

BACK PLUNGER DIAL INDICATOR

DIN 878

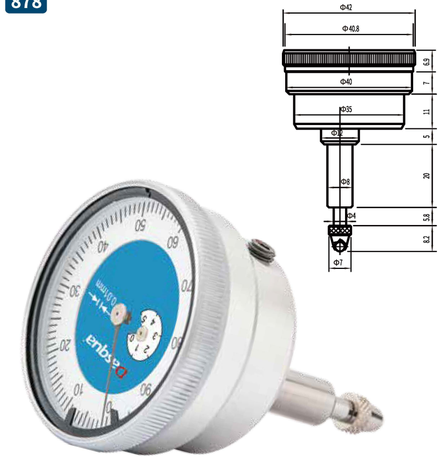

- Strictly made in accordance with DIN 878
- Used to measure surface flatness as well as axial runout and also used to check tool set up and squareness in small spaces where the standard dial indicators are difficult to see
- Limit indicator clips included

Unit:mm

Code	Range	Graduation
5271-0005	0-5	0.01

DIAL INDICATOR

WITH ONE-REVOLUTION

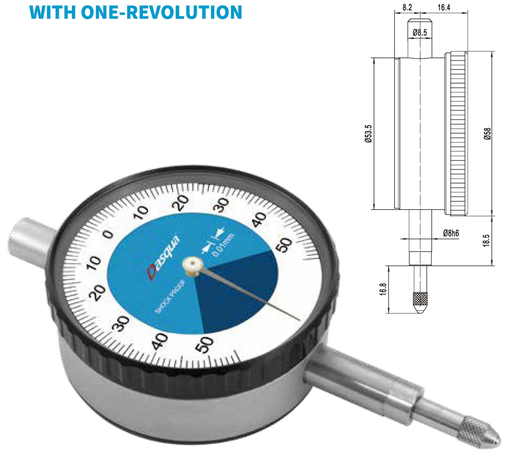

- Unlike many other dial indicators, the one revolution dial indicator literally shows the entire spindle travel or range as one sweep of the hand, eliminating the possibility of reading errors due to miscounting the multiple revolutions
- With one-revolution dial indicators, "within tolerance" and "out-of tolerance" can never misinterpreted
- An unique shock-proof mechanism is incorporated, providing improved immunity to shock due to sudden spindle retraction caused by high impact

Unit:mm

Code	Range	Graduation	Style
5351-0005	±0.25	0.01	flat back
5351-2105	±0.25	0.01	lug back
5351-0010	±0.5	0.01	flat back
5351-2110	±0.5	0.01	lug back

COMPARATOR GAUGE

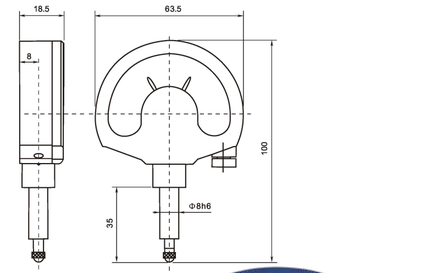



- IP53 protection against liquid
- With shockproof ability
- To check parallelism, smoothness and through running
- Sturdy metal housing with sturdy plastic cover
- Stem and spindle hardened and lapped
- Adjustable tolerance fingers
- With spindle lifting cable

Unit:mm

Code	Range	Graduation
5361-0005	±0.05	0.001
5361-0010	±0.002"	0.0005"

DIAL INDICATOR

WITH MAGNETIC LUG BACK



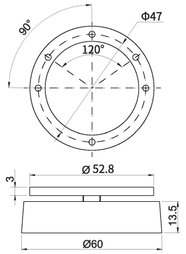

- Permanent powerful magnet
- Fitting for all dial indicator
- Magnet screws off
- Magnetic force: 20kg

5111-1010

Unit:mm

Code	Covering	Range	Graduation
5111-1010	/	/	/
5111-0001	5111-1010	/	/
	5111-0000	0-10	0.01
5122-4211	5111-1010	/	/
	5122-4210	0-1"	0.001"

MULTIFUNCTIONAL DIGITAL INDICATOR

WITH TOLERANCE ALARM



- Glass grating for high accuracy and stable performance

Unit: mm

Code	Range	Resolution	Accuracy
5260-3705	0-12.7/0-0.5"	0.01/0.0005"	0.02
5260-3710	0-25.4/0-1.0"	0.01/0.0005"	0.02
5260-3715	0-50.8/0-2.0"	0.01/0.0005"	0.02
5260-3720	0-101.6/0-4"	0.01/0.0005"	0.02

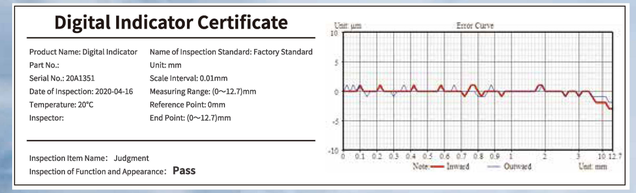

Each indicator is with a matched certificate.



- The functions of tolerance set and tolerance alarm are optional. Alarm light is available for quick-checking whether products' sizes qualified or not.

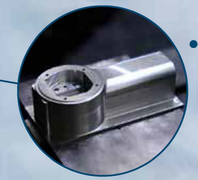

- Housing entirely cast made of high-strength alloy aluminum guaranteeing low deformation

5260-3705

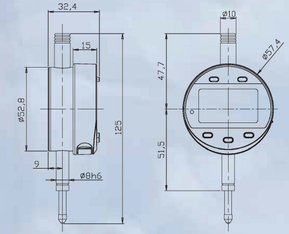



- Temperature and humidity test for each product, ensuring the normal use of each in harsh environment

DIGITAL INDICATOR

mm/in | Battery CR2032 | Data output



- Calibration certificate provided with total forward error, hysteresis error, total error and deviation error on it
- Watchcase made of high-strength aluminum alloy guaranteeing low deformation
- Glass grating for high accuracy and stable performance
- Temperature and humidity test for each product, ensuring the normal use of each in harsh environment
- Copper sleeve and rod precisely ground to reduce shaking
- The functions of tolerance set and tolerance alarm are optional. Alarm light is also available for quick-checking products' tolerance

Unit:mm

Code	Range	Resolution	Accuracy
5260-1105	0-12.7/0-0.5"	0.01/0.0005"	0.02
5260-1110	0-25.4/0-1.0"	0.01/0.0005"	0.02
5260-1115	0-50.8/0-2.0"	0.01/0.0005"	0.02
5260-1120	0-101.6/0-4"	0.01/0.0005"	0.02

DIGITAL INDICATOR

WITH 0.001MM RESOLUTION AND TOLERNCE ALARM

mm/in | Battery CR2032 | Data output

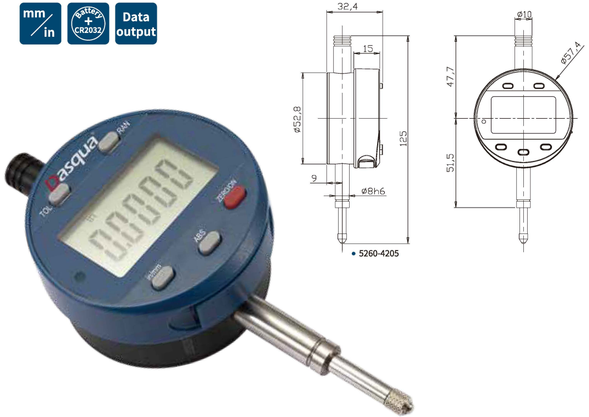

- Calibration certificate provided with total forward error, hysteresis error, total error and deviation error on it
- Watchcase made of high-strength aluminum alloy guaranteeing low deformation
- Glass grating for high accuracy and stable performance
- Temperature and humidity test for each product, ensuring the normal use of each in harsh environment
- Copper sleeve and rod precisely ground to reduce shaking
- The functions of tolerance set and tolerance alarm are optional. Alarm light is also available for quick-checking products' tolerance

Unit:mm

Code	Range	Resolution	Accuracy
5260-4205	0-12.7/0-0.5"	0.001/0.00005"	0.004
5260-4210	0-25.4/0-1.0"	0.001/0.00005"	0.005
5260-4215	0-50.8/0-2.0"	0.001/0.00005"	0.006
5260-4220	0-101.6/0-4"	0.001/0.00005"	0.010

DIGITAL INDICATOR

WITH ABSOLUTE FUNCTION

mm/in | Absolute | Data output | Battery CR2032 | WIRELESS TRANSMITTER



- Wireless system built-in (optional)
- With Absolute-Reference System and no need to set the reference point at every power-on
- Large easy-to-read digital display
- With ABS and Metric/Inch Conversion System
- With long battery-use

Unit:mm

Code	Range	Resolution	A	B	C	D	E	F	G	H	Accuracy
5340-8105	0-12.7/0-0.5"	0.01/0.0005"	60.2	53.8	14.2	40.2	φ60.1	φ6.5	φ8 or 3/8"	φ4.5	0.01/0.0005"
5340-8110	0-25.4/0-1.0"	0.01/0.0005"	55.7	68.8	32.7	46.2	φ61.1	φ6.5	φ8 or 3/8"	φ4.5	0.01/0.0005"
5340-8115	0-50.8/0-2.0"	0.01/0.0005"	83.7	94.8	57.7	46.1	φ61.1	φ6.5	φ8 or 3/8"	φ4.5	0.015/0.001"
5340-9105	0-12.7/0-0.5"	0.001/0.00005"	60.2	53.8	14.2	40.2	φ60.1	φ6.5	φ8 or 3/8"	φ4.5	0.004/0.00016"
5340-9110	0-25.4/0-1.0"	0.001/0.00005"	55.7	68.8	32.7	46.2	φ61.1	φ6.5	φ8 or 3/8"	φ4.5	0.004/0.00016"
5340-9115	0-50.8/0-2.0"	0.001/0.00005"	83.7	94.8	57.7	46.1	φ61.1	φ6.5	φ8 or 3/8"	φ4.5	0.005/0.0002"

WITH ABSOLUTE FUNCTION AND WIRELESS SYSTEM

Unit:mm

Code	Range	Resolution	A	B	C	D	E	F	G	H	Accuracy
5610-1105-A	0-12.7/0-0.5"	0.01/0.0005"	60.2	53.8	14.2	40.2	φ60.1	φ6.5	φ8 or 3/8"	φ4.5	0.01/0.0005"
5610-1110-A	0-25.4/0-1.0"	0.01/0.0005"	55.7	68.8	32.7	46.2	φ61.1	φ6.5	φ8 or 3/8"	φ4.5	0.01/0.0005"
5610-1115-A	0-50.8/0-2.0"	0.01/0.0005"	83.7	94.8	57.7	46.1	φ61.1	φ6.5	φ8 or 3/8"	φ4.5	0.015/0.001"
5610-4105-A	0-12.7/0-0.5"	0.001/0.00005"	60.2	53.8	14.2	40.2	φ60.1	φ6.5	φ8 or 3/8"	φ4.5	0.004/0.00016"
5610-4110-A	0-25.4/0-1.0"	0.001/0.00005"	55.7	68.8	32.7	46.2	φ61.1	φ6.5	φ8 or 3/8"	φ4.5	0.004/0.00016"
5610-4115-A	0-50.8/0-2.0"	0.001/0.00005"	83.7	94.8	57.7	46.1	φ61.1	φ6.5	φ8 or 3/8"	φ4.5	0.005/0.0002"



IP65 DIGITAL INDICATOR

WITH 0.001MM RESOLUTION

IP65 COOLANT&FLUID RESISTANT | mm / in | BATTERY CR2032 | Data output





- Inductive measurement system
- IP65 protection against liquid
- Large LCD display with clear reading
- 3V Lithium battery CR2032
- SPC data output
- Tolerance preset and GO/NG judgement
- “+” or “-” direction set

Unit:mm

Code	Range	Resolution	A	B	Accuracy	Repeatability
5820-0005	0-12.7/0-0.5"	0.001/0.00005"	91.9	14.3	0.007/0.0003"	0.003/0.0001"
5820-0010	0-25.4/0-1.0"	0.001/0.00005"	129.2	27	0.008/0.0003"	0.003/0.0001"
5820-0015	0-50.8/0-2.0"	0.001/0.00005"	179.7	52	0.010/0.0004"	0.003/0.0001"
5820-0020	0-101.6/0-4"	0.001/0.00005"	281.8	103.4	0.015/0.0006"	0.003/0.0001"

BALL POINT

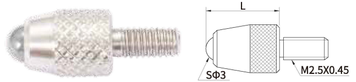

Unit:mm

Code	Material of measuring face	L
5221-6101	Carbide	7.3
5221-6103	Ceramic	7.3
5221-6104	Carbide	8.3
5221-6106	Carbide	12.1
5221-6107	Carbide	14
5221-6108	Carbide	15
5221-6109	Ceramic	15
5221-6110	Carbide	17
5221-6111	Carbide	19.3
5221-6112	Carbide	20
5221-6113	Ceramic	20
5221-6114	Carbide	22
5221-6115	Carbide	25
5221-6116	Ceramic	25
5221-6117	Carbide	30
5221-6118	Ceramic	30

SPHERICAL POINT

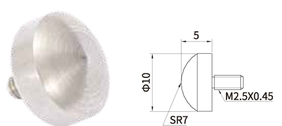

Code	Material of measuring face
5221-6401	steel

BALL POINT



Unit:mm

Code	Material of measuring face	SΦD
5221-6301	steel	1
5221-6302	carbide	1.5
5221-6303	carbide	1.8
5221-6304	carbide	2.5
5221-6305	carbide	4

SHELL TYPE POINT

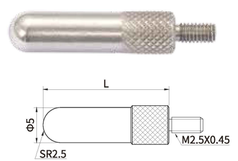

Unit:mm

Code	Material of measuring face	L
5221-6202	steel	5
5221-6203	steel	10
5221-6205	steel	15
5221-6207	steel	20
5221-6208	steel	25
5221-6210	steel	30

CONICAL POINT

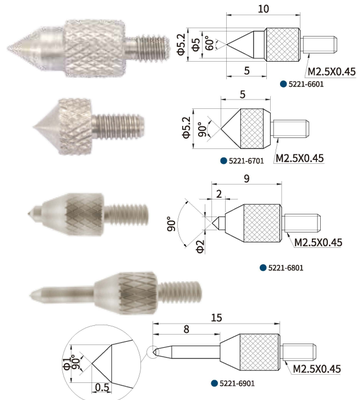

Code	Material of measuring face
5221-6601	steel
5221-6701	steel
5221-6801	steel
5221-6901	steel

FLAT POINT

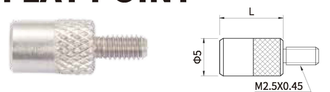

Unit:mm

Code	Material of measuring face	L
5221-7101	steel	8
5221-7102	steel	10

FLAT POINT

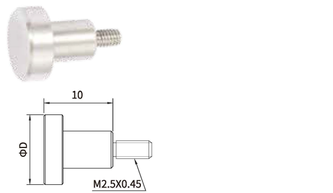

Unit:mm

Code	Material of measuring face	ΦD
5221-7201	steel	10
5221-7202	steel	15
5221-7203	steel	20
5221-7204	steel	25
5221-7205	steel	30

FLAT POINT

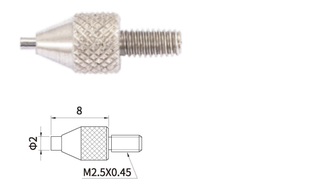

Unit:mm

Code	Material of measuring face
5221-7301	carbide

NEEDLE POINT

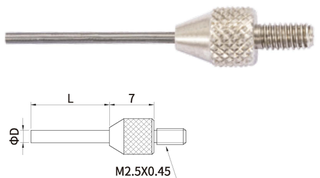

Unit:mm

Code	Material of measuring face	ΦD	L
5221-7701	steel	0.45	3
5221-7702	steel	0.45	5
5221-7703	carbide	1	3
5221-7704	carbide	1	5
5221-7705	carbide	1	8
5221-7706	carbide	1	10
5221-7707	carbide	1	20
5221-7708	carbide	1	40
5221-7709	carbide	1.5	5
5221-7710	carbide	1.5	10
5221-7711	carbide	1.5	13
5221-7712	carbide	1.5	20
5221-7713	carbide	1.5	40
5221-7714	carbide	2	8
5221-7715	carbide	2	18
5221-7716	carbide	2	28
5221-7717	carbide	2	40

NEEDLE POINT

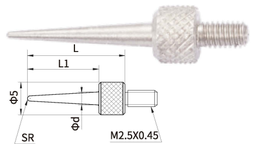

Unit:mm

Code	Material of measuring face	L1	L	SR	Φd
5221-7601	steel	11	15	0.4	2
5221-7602	steel	13	17	0.2	2
5221-7603	steel	21	25	0.4	3
5221-7604	steel	31	35	0.4	3

KNIFE EDGE POINT

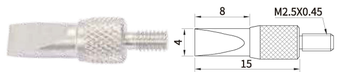

Code	Material of measuring face
5221-7001	steel

BLADE POINT

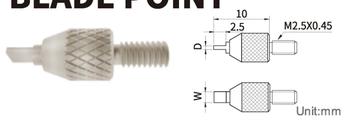

Unit:mm

Code	Material of measuring face	D	W
5221-7801	steel	0.4	2
5221-7802	steel	0.6	2
5221-7803	steel	1	4

ROLLER POINT

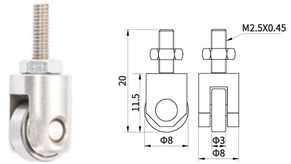

Code	Material of measuring face
5221-7901	steel

EXTENSION ROD

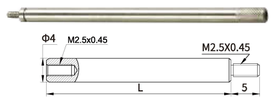

Unit:mm

Code	Material of measuring face	L
5221-8001	steel	10
5221-8002	steel	15
5221-8003	steel	20
5221-8004	steel	25
5221-8005	steel	30
5221-8006	steel	35
5221-8007	steel	40
5221-8008	steel	45
5221-8009	steel	50
5221-8010	steel	55
5221-8011	steel	60
5221-8012	steel	65
5221-8013	steel	70
5221-8014	steel	75
5221-8015	steel	80
5221-8016	steel	90
5221-8017	steel	100

FLAT POINT

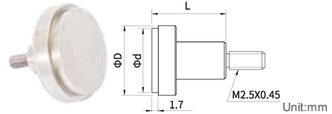

Unit:mm

Code	Material of measuring face	flatness(μm)	Φd	ΦD	L
5221-9001	carbide	3	4.3	5.2	5
5221-9002	carbide	3	6.5	7	10
5221-9003	carbide	3	9.5	10.5	10
5221-9004	carbide	5	15	17	10
5221-9005	carbide	5	20	22	10
5221-9006	carbide	5	25	27	10
5221-9007	carbide	5	30	32	10

FLAT POINT



Unit:mm

Code	Material of measuring face	flatness(μm)	Φd	Φd0	ΦD
5221-9008	carbide	3	6.4	3	7
5221-9009	carbide	3	8	4.5	9

SPHERICAL POINT

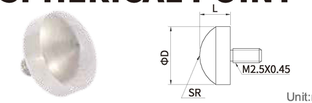

Unit:mm

Code	Material of measuring face	ΦD	SR	L
5221-9010	steel	5.5	5	3
5221-9011	steel	7.9	5	5

SPHERICAL POINT

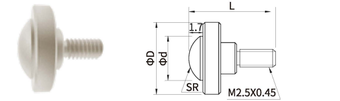

Unit:mm

Code	Material of measuring face	ΦD	Φd	SR	L
5221-9012	carbide	5.5	5	3	3
5221-9013	carbide	7.9	5	5	5
5221-9014	carbide	10	7	5	5

POINT FOR SPECIAL INDICATOR

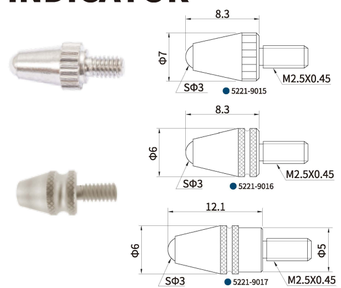

Unit:mm

Code	Material of measuring face
5221-9015	carbide
5221-9016	carbide
5221-9017	carbide

DIAL TEST INDICATOR

WITH 0.001MM GRADUATION

Made in Europe

DasquaBlu DIN 2270

- Made in Germany
- Large dial with scratch-resistance coating to make reading clear
- Graduation at 0.001mm, which is better than the limit of most other test indicators(0.002mm)
- With high abrasion resistance and non-magneticness
- Owning water proof ability
- Used to measure surface flatness, straightness and axial runout and easy to reach places where normal indicators can't reach







- Each test indicator is examed carefully and enclosed with calibration certificate.

- Distinct lines and figures etched on extrem big dial

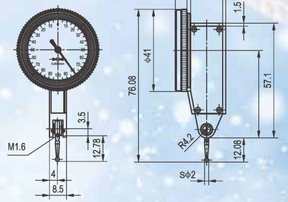

- Jeweled bearing and ruby contact point to ensure high durability



Unit: mm

Code	Range	Graduation
5221-0105-A	0-0.2	0.001

DIAL TEST INDICATOR

DIN 2270

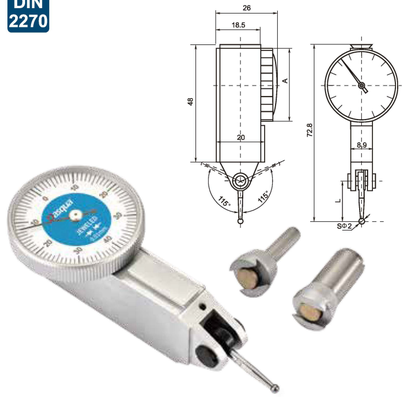

- A hard frame body providing excellent rigidity
- White edge of dial for easy to read
- Hardened and ground contact point
- Satin chrome-finish case for durability
- Precision gear-driven design with smooth movement

Unit:mm

Code	Range	Graduation	Casing Diameter(A)	Length of Stylus(L)
5221-0005	0.8	0.01	φ30	16.5
5221-0000	0.8	0.01	φ37.5	16.5

INCH SIZE

Unit:mm

Code	Range	Graduation	Casing Diameter(A)	Length of Stylus(L)
5610-0160	0-0.03"	0.001"	1.48"	0.62"
5610-0162	0-0.03"	0.0005"	1.48"	0.62"

DIAL TEST INDICATOR

WITH SHOCK-PROOF GEARING

DIN 2270 SHOCK-PROOF

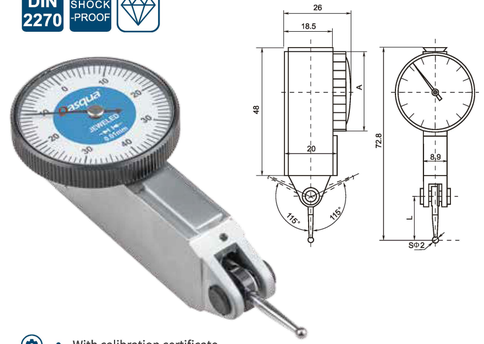

- With calibration certificate
- Tough shock-proof gearing
- A hard frame body providing excellent rigidity
- White edge of dial for easy to read
- Hardened and ground contact point
- Satin chrome-finish case for durability
- Precision gear-driven design with smooth movement

Unit:mm

Code	Range	Graduation	Casing Diameter(A)	Length of Stylus(L)
5221-1129	0.8	0.01	φ30	16.5
5221-1140	0.8	0.01	φ37.5	16.5
5221-3105	0.2	0.002	φ30	16

INCH SIZE

Unit:mm

Code	Range	Graduation	Casing Diameter(A)	Length of Stylus(L)
5221-3106	0-0.03"	0.0005"	1.18"	0.62"
5222-6105	0-0.02"	0.0005"	1.5"	0.53"

DIAL TEST INDICATOR

WITH LONG STYLI

DIN 2270 SHOCK-PROOF

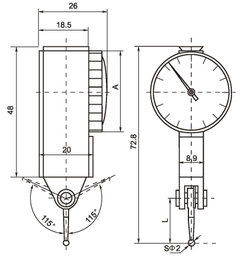



- With long styli for easily measuring hard-to-get places
- With calibration certificate
- Tough shock-proof gearing
- A hard frame body providing excellent rigidity
- White edge of dial for easy to read
- Hardened and ground contact point
- Satin chrome-finish case for durability
- Precision gear-driven design with smooth movement

Unit:mm

Code	Range	Graduation	Casing Diameter(A)	Length of Stylus(L)
5221-1215	0.8	0.01	φ30	30
5221-1220	0.8	0.01	φ37.5	30
5221-1205	0.8	0.01	φ30	46.4
5221-1210	0.8	0.01	φ37.5	46.4

BACK PLUNGER DIAL TEST INDICATOR

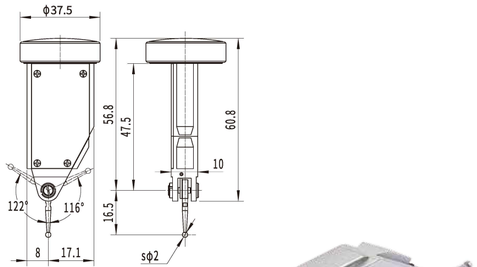

DIN 2270 SHOCK-PROOF

- With upward dial for measuring up side of a large workpiece or high workbench
- With calibration certificate
- Tough shock-proof gearing
- A hard frame body providing excellent rigidity
- White edge of dial for easy to read
- Hardened and ground contact point
- Satin chrome-finish case for durability
- Precision gear-driven design with smooth movement

Unit:mm

Code	Range	Graduation	Casing Diameter	Length of Stylus
5461-0005	0.8	0.01	ϕ37.5	16.5

TWICE RANGE DIAL TEST INDICATOR

DIN 2270 SHOCK-PROOF

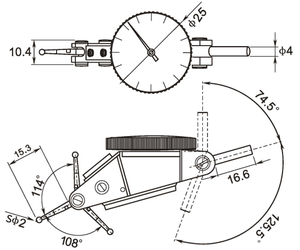



- Tough shock-proof gearing
- A hard frame body providing excellent rigidity
- White edge of dial for easy to read
- Satin chrome-finish case for durability
- Precision gear-driven design with smooth movement
- With twice range on large easy-to-read tilted dial

Unit:mm

Code	Range	Graduation	Casing Diameter	Reading
5221-1115	0-1.6	0.01	φ25	0-40-0
5222-6110	0-0.06"	0.0005"	1.5"	0-15-0

BI-DIRECTIONAL DIAL TEST INDICATOR

DIN 2270 SHOCK-PROOF

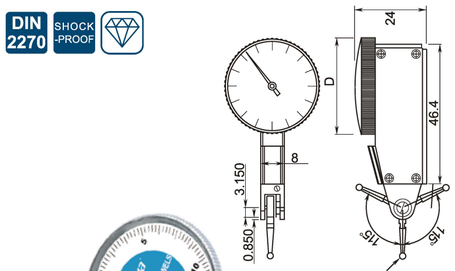

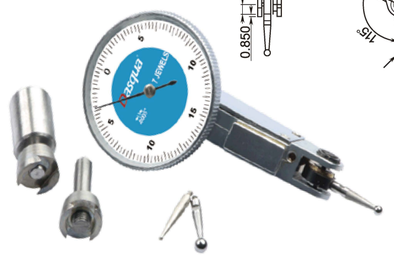

- With auto-reverse contact point
- With jeweled bearing
- Bi-directional constant clockwise rotation
- Hard frame body providing excellent rigidity
- Satin chrome-finish case for durability

Unit:mm

Code	Range	Graduation	D	Probe
5221-1106	0-0.5	0.01	φ32	Sφ1,Sφ2,Sφ3
5222-6103	0-0.03"	0.0005"	φ40	Sφ1,Sφ2,Sφ3
5222-6106	0-0.02"	0.0005"	φ40	Sφ1,Sφ2,Sφ3
5222-7103	0-0.008"	0.0001"	φ32	Sφ1,Sφ2,Sφ3

BI-DIRECTIONAL TEST INDICATOR AND MAG BASE SET

DIN 2270 | SHOCK-PROOF



- With auto-reverse contact point
- With jeweled bearing
- Bi-directional constant clockwise rotation
- Hard frame body providing excellent rigidity
- Satin chrome-finish case for durability
- Together with a magnetic base for easy mounting

Unit:mm

Code	Range	Graduation
5221-1000	0-0.8	0.01
5222-6000	0-0.03"	0.0005"

TEST INDICATOR KIT

WITH UNIVERSAL HOLDER

DIN 2270 | SHOCK-PROOF



- Tough shock-proof gearing
- A hard frame body providing excellent rigidity
- White edge of dial for easy to read
- Hardened and ground contact point
- Satin chrome-finish case for durability
- Precision gear-driven design with smooth movement
- With Universal holder to measure universal direction

Unit:mm

Code	Range	Graduation
5221-1001	0-0.8	0.01
5222-6001	0-0.03"	0.0005"

TWICE RANGE DIAL TEST INDICATOR KIT



- Tough shock-proof gearing
- A hard frame body providing excellent rigidity
- White edge of dial for easy to read
- Hardened and ground extra contact point
- Satin chrome-finish case for durability
- Precision gear-driven design with smooth movement
- With twice range on large easy-to-read tilted dial

Unit:mm

Code	Range	Graduation
5221-1002	0-1.6	0.01
5222-6002	0-0.06"	0.0005"

DIGITAL TEST INDICATOR

Battery SR44 | mm/in

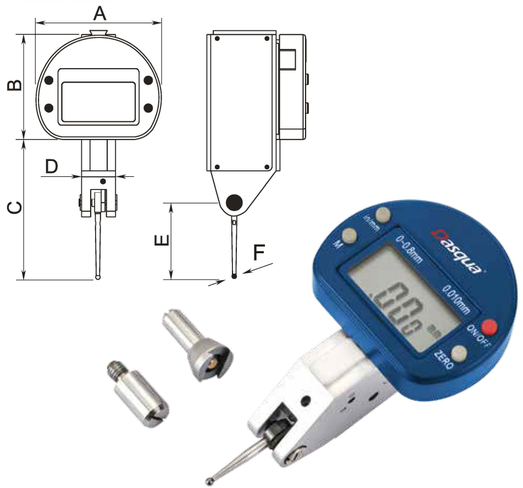

- With large easy-to-read digital display
- With zero setting and metric-inch conversion functions
- Carbide probe
- Packed in a fitted case

Unit:mm

Code	Range	Resolution	A	B	C	D	E	F	Accuracy
5410-8105	0-0.5/0-0.02"	0.01/0.0005"	47.65	40	44.6	13.27	20	sφ2	±0.010
5410-8110	0-0.8/0-0.03"	0.01/0.0005"	47.65	40	44.6	13.27	20	sφ2	±0.020
5410-9105	0-0.4/0-0.02"	0.001/0.00005"	47.65	40	44.6	13.27	20	sφ2	±0.020

STYLI FOR DIAL TEST INDICATOR



● 5221-1005
Made of steel



● 5221-1015
Made of carbide



● 5221-1070
Made of ruby

Unit:mm

Code	Size	Points' Material
5221-1005	16xφ1	steel
5221-1006	16.5xφ2	steel
5221-1007	17xφ3	steel
5221-1044	16xφ1	carbide
5221-1045	16.5xφ2	carbide
5221-1050	17xφ3	carbide
5221-1070	16.5xφ2	ruby
5221-1071	17xφ3	ruby
5221-1105	30.5xφ2	ruby
5221-1110	46.5xφ2	ruby

DIAL BORE GAUGE SET

WITH EXTRA LONG RANGE

- Large measuring range from 35mm to 160mm
- So cost effective that can reach the range of 2 or 3 dial bore gauges
- Carbide-tipped and ceramic contact points optional for customers' desire
- Strictly made in accordance with DIN878

Unit:mm

Code	Range	Graduation
5510-0005	35-160	0.01
5510-0000	1.4-6"	0.0005"



DIAL BORE GAUGE

Unit:mm

Code	Range	Graduation	Depth
5511-1100	4-6	0.01	40
5511-1105	6-10	0.01	40
5511-1110	10-18	0.01	100
5511-1115	18-35	0.01	150
5511-1120	35-50	0.01	150
5511-1121	35-60	0.01	150
5511-1125	50-100	0.01	150
5511-1130	50-160	0.01	150
5511-1135	160-250	0.01	400
5511-1140	250-450	0.01	500
5512-6105	0.24-0.4"	0.0005"	1.57"
5512-6110	0.4-0.7"	0.0005"	4"
5512-6115	0.7-1.5"	0.0005"	6"
5512-6120	1.4-2.4"	0.0005"	6"
5512-6125	2-4"	0.0005"	6"
5512-6130	2-6"	0.0005"	6"
5512-6135	6-10"	0.0005"	16"
5512-6140	10-16"	0.0005"	16"

HIGHER PRECISION DIAL BORE GAUGE

Unit:mm

Code	Range	Graduation	Depth
5511-2105	6-10	0.001	40
5511-2110	10-18	0.001	100
5511-2115	18-35	0.001	150
5511-2120	35-50	0.001	150
5511-2125	50-100	0.001	150
5511-2130	50-160	0.001	150
5511-2135	160-250	0.001	250
5511-2140	250-450	0.001	250
5512-7105	0.24-0.4"	0.0001"	1.57"
5512-7110	0.4-0.7"	0.0001"	4"
5512-7115	0.7-1.5"	0.0001"	6"
5512-7120	1.4-2.4"	0.0001"	6"
5512-7125	2-4"	0.0001"	6"
5512-7130	2-6"	0.0001"	6"
5512-7135	6-10"	0.0001"	16"
5512-7140	10-16"	0.0001"	16"

- Used to measure close tolerance of holes, taper and roundness
- Steel body and interchangeable carbide anvils
- Extension rods and washers for fine adjustment in sizes to select a specific range
- Dial indicator fully protected by a rugged cover



DIGITAL BORE GAUGE

Data output | mm / in | BATTERY + CR2032



- Used to measure close tolerance of holes, taper and roundness
- Steel body and interchangeable carbide anvils
- Extension rods and washers for fine adjustment in sizes to select a specific range
- Large digital display for easy reading
- Lightweight housing for extra length and protection
- Thermally insulated for extra stability of accuracy

Unit:mm

Code	Range	Resolution	Depth
5610-8105	6-10/0.24-0.4"	0.002/0.0001"	40/1.57"
5610-8110	10-18/0.4-0.7"	0.002/0.0001"	100/4"
5610-8115	18-35/0.7-1.5"	0.002/0.0001"	150/6"
5610-8120	35-50/1.4-2.4"	0.002/0.0001"	150/6"

DIAL BORE GAUGE

WITH LONG HANDLE



- Equipped with 0-3mm universal dial indicator
- Carbide-tipped contact points for durability
- The dial indicator is fully protected by a solid cover
- With screw anvils, convenience to set dimension

Unit:mm

Code	Range	Graduation	Depth
5411-0005	35-50	0.01	500
5411-0010	50-160	0.01	500
5411-0015	35-50	0.01	1000
5411-0020	50-160	0.01	1000
5411-0025	160-250	0.01	1000
5411-0030	250-450	0.01	1000

DIAL BORE GAUGE

90° RIGHT ANGLE

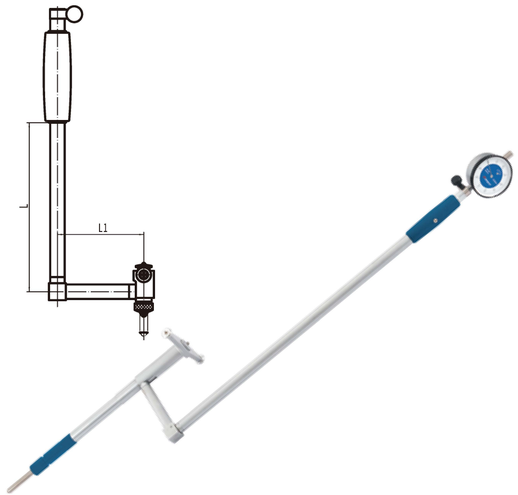

- Equipped with 0-3mm universal dial indicator
- Carbide-tipped contact points for durability
- The dial indicator is fully protected by a solid cover
- With screw anvils, convenience to set dimension
- For inside measurement of deep holes

Unit:mm

Code	Range	Graduation	L	L1
5441-1005	35-50	0.01	150	76.2
5441-1010	50-160	0.01	150	76.2
5441-1015	160-250	0.01	250	100
5441-1020	250-450	0.01	250	100

DIAL BORE GAUGE

WITH LARGE MEASURING RANGE



● 5581-0010
Digital available

- Equipped with 0-3mm universal dial indicator
- Carbide-tipped contact points for durability
- The dial indicator is fully protected by a solid cover
- With screw anvils, convenience to set dimension
- For inside measurement of special holes

Unit:mm

Code	Range	Graduation	Depth
5581-0005	400-800	0.01	400
5581-0010	400-800/16"-32"	0.002/0.0005"	400

GAUGE FOR BEARING METAL BORING MACHINE

- Used to measure cylinder bore without unloading bore and to adjust the concentricity of cylinder bore and bore bar as well as adjust the highness of bore
- Large dial for easy reading
- Graduation:0.01mm
- Accuracy:0.03mm

Unit:mm

Code	Name	Range	Graduation	A	B	L	H	Accuracy
5671-0005	Dial bore gauge	ϕ48-66(Use to ϕ32 bore bar) ϕ62-100(Use to ϕ45 bore bar)	0.01	φ42	28	77	250	0.03
5671-0010	Tool Setting Dial	ϕ36-66(Use to ϕ32 bore bar) ϕ50-100(Use to ϕ45 bore bar)	0.01	φ42	63	46	100-128	0.03
5671-0015	Centre align dial	ϕ47-75(Use to ϕ32 bore bar) ϕ58-150(Use to ϕ45 bore bar)	0.01	φ42	/	107	111	0.03

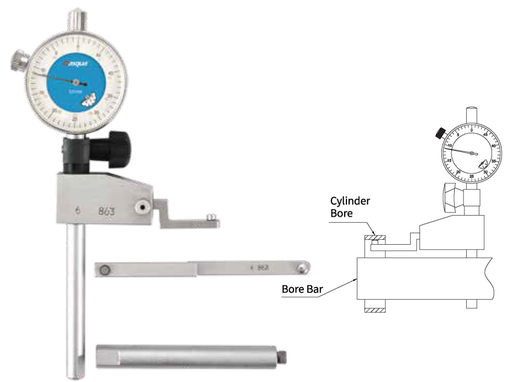

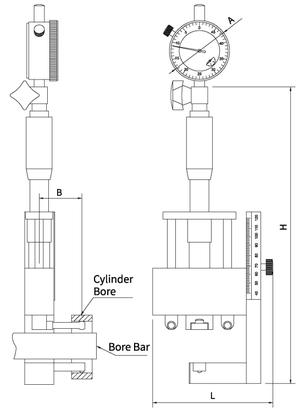

Dial Bore Gauge ● 5671-0005
Used to measure cylinder bore without unloading bore



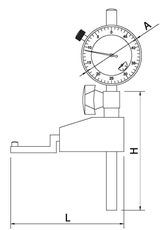

Centre Align Dial ● 5671-0015
Used to adjust the concentricity of cylinder bore and bore bar

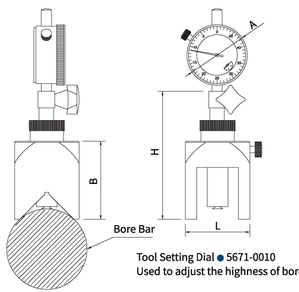

Tool Setting Dial ● 5671-0010
Used to adjust the highness of bore

CRANKSHAFT TESTER



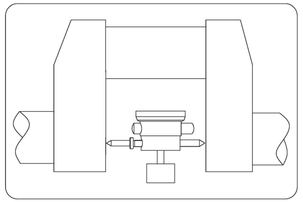

- To Measure crankshaft deflection
- The balance block is mounted on the back of dial indicator to keep the dial indicator facing up
- Measuring range: 60-500mm
- Graduation:0.01mm
- Rotatable dial.supplied with extensions

Unit:mm

Code	Range	Graduation	Dial indicator range	Extension rod	Accuracy
5751-0005	60-300	0.01	0-3	32.2,48,96,185	±0.014
5751-0010	60-500	0.01	0-3	32.2,48,96,185,197	±0.014

DIGITAL RADIUS GAUGE

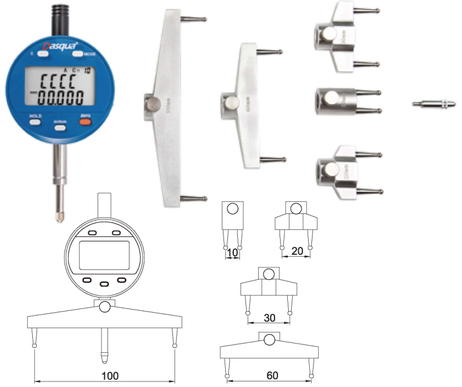

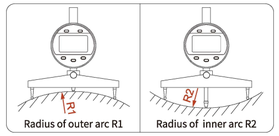

Radius of outer arc R1 | Radius of inner arc R2

- Use to measure radius of internal and external arcs
- Supplied with 5 jaws for different sizes of arc
- USB data output
- Large LCD display with clear reading
- Stem and spindle stainless, hardened and lapped
- Different sized probes for arc measurements
- Measured value display in percent and radius display

Unit:mm

Code	Outside Diameter Range	Inside Diamter Range	Graduation	Radius Accuracy
5831-0005	5-700	6.5-700	0.005/0.0015"	<1%

INTERCHANGEABLE POINTS BORE GAUGE



MOST VALUE SAVER

The range of this product equals 5 same-kind products thanks to interchangeable points.

Unit:mm

Code	Graduation	Measuring Range	Indicating range	L	I	Error
5800-1015	0.01	55-153	2	90	3.5	±20μm

THICKNESS GAUGE

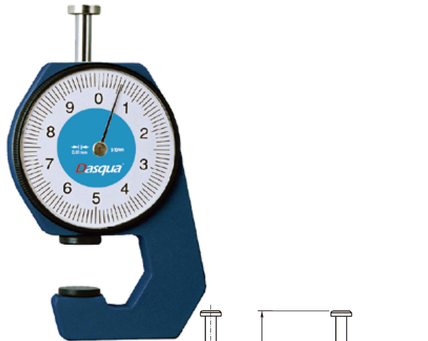

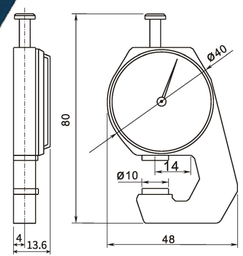

- Thickness gauges are attachment to the dial indicators and offer a quick and efficient means with a convenient grip handle to measure the thickness of paper, leather, rubber, fabric, metal plate, glass ,plastic plate, etc
- With steel or ceramic measuring faces
- Sturdy light metal frame, lacquered, with spindle lifting lever
- Stainless spindle, hardened and precision ground

Unit:mm

Code	Range	Graduation	Accuracy
5841-8110	0-10	0.1	±0.05

THICKNESS GAUGE



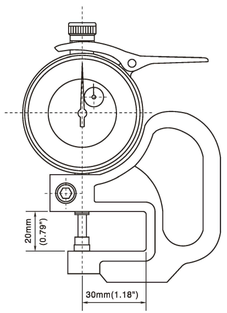

● 5841-8105

- Thickness gauges are attachment to the dial indicators and offer a quick and efficient means with a convenient grip handle to measure the thickness of paper, leather, rubber, fabric, metal plate, glass ,plastic plate, etc
- With ceramic measuring faces
- Sturdy light metal frame, lacquered, with spindle lifting lever
- Stainless spindle, hardened and precision ground

Unit:mm

Code	Range	Graduation	Accuracy
5841-8105	0-10	0.01	±0.02
5841-8106	0-30	0.01	±0.035
5842-4105	0-0.5"	0.0005"	±0.001"

THICKNESS GAUGE

WITH DEEP-THROAT



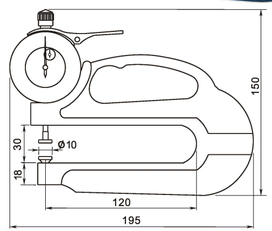

- Contact point and the flat anvil are ceramic for corrosion resistance
- 120mm throat for measuring the thickness of items where a greater depth is required
- Grip handle, thumb trigger, and spring-loaded spindle for accurate measurements
- Provide quick and efficient inspection of thickness

Unit:mm

Code	Range	Graduation	Accuracy
5841-1105	0-10	0.01	±0.02
5841-1110	0-20	0.01	±0.03
5842-4110	0-0.5"	0.0005"	±0.001"

DIGITAL THICKNESS GAUGE

mm/in | BATTERY CR2032 | Data output



- Thickness gauges are attachment to the dial indicators and offer a quick and efficient means with a convenient grip handle to measure the thickness of paper, leather, rubber ,fabric, metal plate, glass, plastic plat, etc
- With large LCD Screen and provide error-free reading
- With ceramic measuring faces
- With convenient grip handle, thumb trigger and spring-loaded spindle for accurate measurements

Unit:mm

Code	Range	Resolution	Accuracy
5840-6200	0-10/0-0.4"	0.01/0.0005"	±0.02

DIGITAL THICKNESS GAUGE

WITH DEEP-THROAT

mm/in | Battery CR2032 | Data output



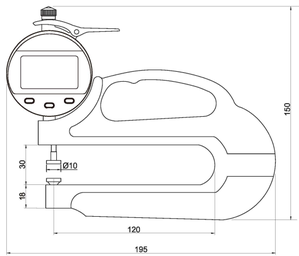

- Contact point and the flat anvil are ceramic for corrosion resistance
- 120mm throat for measuring the thickness of items where a greater depth is required
- Grip handle, thumb trigger, and spring-loaded spindle for accurate measurements
- Provide quick and efficient inspection of thickness
- With large LCD Screen and provide error-free reading

Unit:mm

Code	Range	Resolution	Accuracy
5840-6205	0-10/0.4"	0.01/0.0005"	±0.02

DIGITAL THICKNESS GAUGE

WITH BLACK HANDLE

mm/in | Battery CR2032 | Data output



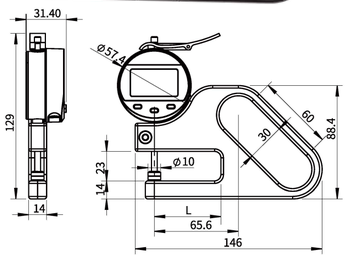

- Contact point and the flat anvil are ceramic for corrosion resistance
- Handle with anodization for longer service life
- Grip handle, thumb trigger, and spring-loaded spindle for accurate measurements
- Provide quick and efficient inspection of thickness
- With large LCD Screen and provide error-free reading

Unit:mm

Code	Range	Resolution	L	Accuracy
5840-6215	0-10/0.4"	0.01/0.0005"	30	±0.02
5840-6220	0-10/0.4"	0.01/0.0005"	50	±0.02
5840-6225	0-10/0.4"	0.01/0.0005"	100	±0.02
5840-6230	0-10/0.4"	0.01/0.0005"	120	±0.02

DIGITAL THICKNESS GAUGE

Battery CR2032 | mm/in/F



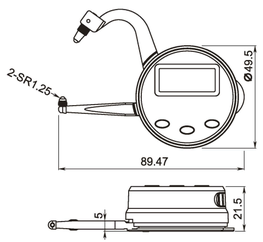

- Large LCD display for easy and clear reading
- Spring loaded travel
- The compact size and lightweight ensure it is very convenient ,handy and easy to operate
- Data hold function
- Class A for electrostatic discharge

Unit:mm

Code	Range	Resolution	Accuracy
2140-8105	0-25/0-1"	0.01/0.0005"/1/64"	0.05/0.002"

DIGITAL THICKNESS GAUGE

Battery CR2032 | mm/in/F



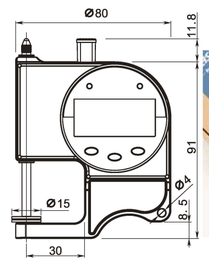



- Spring load movement with a push button
- Large LCD display for easy and clear readings
- Thickness measurement of different materials
- Data hold function

Unit:mm

Code	Range	Resolution	Accuracy
2140-8110	0-25/0-1"	0.01/0.0005"/1/128"	0.05/0.002"

INTERNAL DIAL CALIPER GAUGE

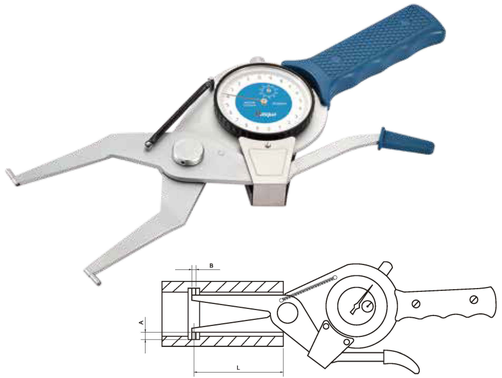

- Versatile internal dial caliper gauge for measuring inside diameter, ring groove bottom diameter and inside step diameter or special holes of the workpiece
- The gauge is spring loaded and makes point contact at a constant measuring force
- Carbide measuring contact points
- Can be set with a micrometer or ring gauge
- Bezel rotates for zero setting

Unit:mm

Code	Range	Graduation	Accuracy	A	B	L
5810-2005	15-35	0.01	±0.035	3	φ3	50
5810-2010	35-55	0.01	±0.035	6	φ3	80
5810-2015	55-75	0.01	±0.035	8	φ3	90
5810-2020	75-95	0.01	±0.035	8	φ3	100
5810-2025	95-115	0.01	±0.035	10	φ3.2	150
5810-2030	115-135	0.01	±0.035	10	φ3.2	150
5812-4005	0.6-1.4"	0.0005"	±0.002"	0.118"	0.118"	1.9"
5812-4010	1.4-2.2"	0.0005"	±0.002"	0.236"	0.118"	3.1"
5812-4015	2.2-3.0"	0.0005"	±0.002"	0.315"	0.118"	3.1"
5812-4020	3.0-3.8"	0.0005"	±0.002"	0.315"	0.118"	3.9"

INTERNAL DIGITAL CALIPER GAUGE

Battery CR2032 | Data output | mm/in

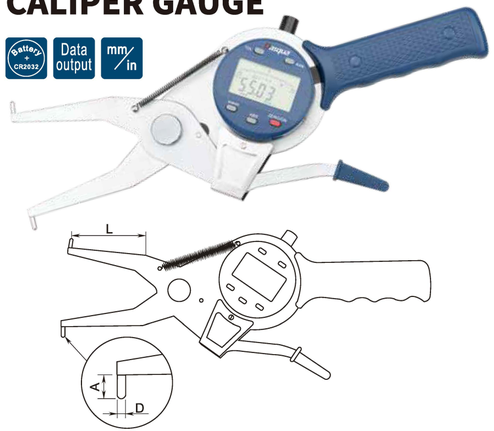

- Versatile internal dial caliper gauge for measuring inside diameter, ring groove bottom diameter and inside step diameter or special holes of the workpiece
- The gauge is spring loaded and makes point contact at a constant measuring force
- With large LCD display for clear and error-free readings adings
- Carbide measuring contact points
- With data output for SPC analysis

Unit:mm

Code	Range	Resolution	Accuracy	L	A	D
5811-0005	15-35	0.01/0.0005"	±0.035/0.002"	50	3	φ3
5811-0010	35-55	0.01/0.0005"	±0.035/0.002"	80	6	φ3
5811-0015	55-75	0.01/0.0005"	±0.035/0.002"	90	8	φ3
5811-0020	75-95	0.01/0.0005"	±0.035/0.002"	100	8	φ3
5811-0025	95-115	0.01/0.0005"	±0.035/0.002"	150	10	φ3.2
5811-0030	115-135	0.01/0.0005"	±0.035/0.002"	150	10	φ3.2

EXTERNAL DIAL CALIPER GAUGE

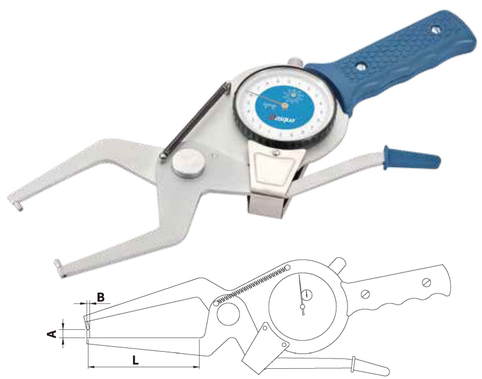

- Versatile external dial caliper gauge for measuring outside diameter, ring groove bottom diameter, narrow grooves and the dimensions that hard to reach
- The gauge is spring loaded and makes point contact at a constant measuring force
- Carbide measuring contact points
- Can be set with a micrometer or ring gauge
- Bezel rotates for zero setting

Unit:mm

Code	Range	Graduation	Accuracy	A	B	L
5721-0005	0-20	0.01	±0.035	6	φ3	60
5721-0010	20-40	0.01	±0.035	6	φ3	60
5721-0015	40-60	0.01	±0.035	6	φ3	55
5721-0020	60-80	0.01	±0.035	6	φ3	55
5721-0025	80-100	0.01	±0.035	6	φ3	55
5722-4005	0-0.8"	0.0005"	±0.002"	0.236"	0.118"	2.3"
5722-4010	0.8-1.6"	0.0005"	±0.002"	0.236"	0.118"	2.3"
5722-4015	1.6-2.4"	0.0005"	±0.002"	0.236"	0.118"	2.1"
5722-4020	2.4-3.2"	0.0005"	±0.002"	0.236"	0.118"	2.1"
5722-4025	3.2-4.0"	0.0005"	±0.002"	0.236"	0.118"	2.1"

EXTERNAL DIGITAL CALIPER GAUGE

Battery CR2032 | Data output | mm/in

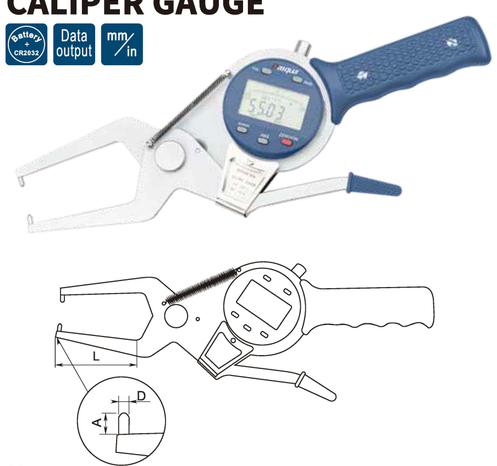

- Versatile internal dial caliper gauge for measuring outside diameter, ring groove bottom diameter, narrow grooves and the dimensions that hard to reach
- The gauge is spring loaded and makes point contact at a constant measuring force
- With large LCD display for clear and error-free readings
- Carbide measuring contact points
- With data output for SPC analysis

Unit:mm

Code	Range	Resolution	Accuracy	A	D	L
5630-1005	0-20	0.01/0.0005"	±0.035/0.002"	6	φ3	60
5630-1010	20-40	0.01/0.0005"	±0.035/0.002"	6	φ3	60
5630-1015	40-60	0.01/0.0005"	±0.035/0.002"	6	φ3	55
5630-1020	60-80	0.01/0.0005"	±0.035/0.002"	6	φ3	55
5630-1025	80-100	0.01/0.0005"	±0.035/0.002"	6	φ3	55

INTERNAL DIGITAL CALIPER GAUGE



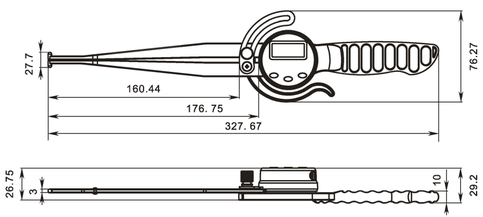

- Make quick and accurate inside measurements of different materials
- Perfect for woodworking, carpentry, metal fabrication, etc
- High hardness and wear resistance
- With large LCD display for clear and error-free readings
- The gauge is spring loaded and makes point contact at a constant measuring force

Unit:mm

Code	Range	Resolution	Accuracy
1804-1010	12.7-165/0.5-6.5"	0.1/0.005"/1/64"	0.2/0.01"
1804-1015	12.7-216/0.5-8.5"	0.1/0.005"/1/64"	0.3/0.02"

EXTERNAL DIGITAL CALIPER GAUGE



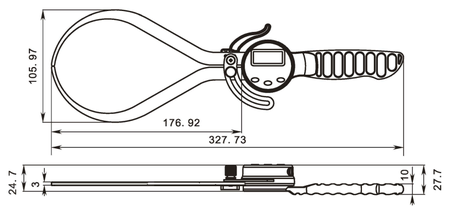

- Make quick and accurate outside measurements of different materials.
- Perfect for woodworking, carpentry, metal fabrication, etc
- High hardness and wear resistance
- With large LCD display for clear and error-free readings
- The gauge is spring loaded and makes point contact at a constant measuring force

Unit:mm

Code	Range	Resolution	Accuracy
1804-1020	0-150/0-6"	0.1/0.005"/1/64"	0.2/0.01"
1804-1025	0-200/0-8"	0.1/0.005"/1/64"	0.3/0.02"

SNAP ACTION CALIPER



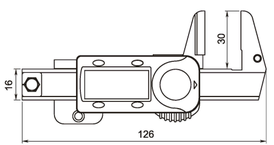

- With spring-loaded mechanism to allow quick and efficient measurements
- With large LCD display for clear and error-free readings
- Wide jaw for easy position
- Hardened stainless steel construction
- Hanging loop included for attachment to belt or chain

Unit:mm

Code	Range	Resolution	Accuracy
2140-8101	0-25/0-1"	0.0005"/0.01/1/64	0.03/0.0015"

MAGNETIC STAND

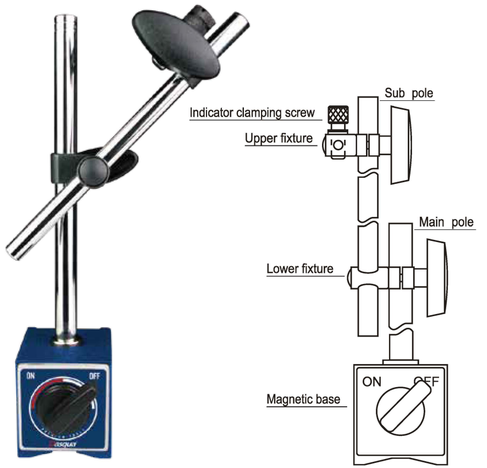

- Solid structure with electroplated surfaces, precision ground end-faces
- With fine adjustment device, which is heat-treated to ensure stability and durability
- With clamp holes of 6mm, 8mm, which satisfy the use of most indicators and test indicators
- 150° V-grooved base can be placed on the cylindrical surfaces for easily fixing the indicators
- Well selected ferrite permanent magnet with magnetic force greater than calibration value
- On/off switch for magnet, easy to move the base without the influence of magnetic force

Unit:mm

Code	Holding Power	Base	Main Pole	Sub Pole	Dia. of Clam Hold	Weight
7700-0005	80kg	58x50x55	φ12x177	φ10x165	φ6/φ8	1.6kg

LOCK 'T MAGNETIC BASE

Dasqua Blu



VS



- Hydraulic

- Equal locking force, more competitive price

- **Two clamping holes**
  Designed with two clamping holes, which are suitable for metric and inch dial indicators , plus dovetail groove for test indicators, bringing great convenience holding capabilities





φ6mm, φ8mm, 3/8", Dovetail



10.0KG
(Arm Locking Power)

- **Super forced locking mechanical universal arm**
  New type locking mechanism, super strong arm lock and super tight locking force guarantees long life and firm positioning



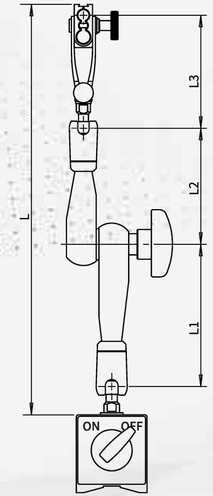

- **CNC Machining**
  Main parts produced on CNC machines, providing extremely accurate and high precision, ensuring high quality and high stability

- All wear parts use hardened high grade steel and with hardness over 58HRC
- Inner structure is made of bearing steel, delivering more wear-resisting ability and longer service life.delivering more wear-resistance and longer life

Unit: mm

Code	Holding Power	Base	L1	L2	L3	L
7121-0020	50kg	40 x 40 x 40	62	52	79	220
7121-0025	80kg	60 x 50 x 55	100	82	81	290
7121-0030	100kg	73 x 50 x 55	145	95	81	355
7121-0035	100kg	73 x 50 x 55	175	125	81	415



- **Ergonomic design**
  Ergonomic-designed tightening knob provides comfortable and firm grip; Flexible and super strong rotary joints, providing smooth adjustments in any direction or location

MAGNETIC BASE WITH FINE ADJUSTMENT

- 150° V-grooved base can be placed on the cylindrical surfaces as well as flat surfaces for easily fixing the indicators.
- Well selected ferrite permanent magnet with magnetic force greater than calibration value
- On/off switch for magnet, easy to move the base without the influence of magnetic force.

- Solid structure with surfaces electroplated and end-faces ground

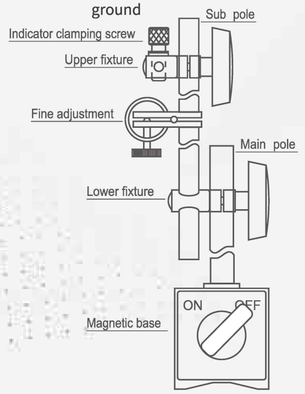







- With clamp holes of φ4mm, φ8mm, 3/8" , which satisfy the use of most indicators and test indicators.

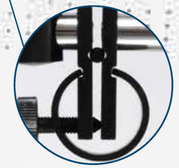

- With fine adjustment device, which is heat-treated to ensure stability and durability.

Unit:mm

Code	Holding Power	Base	Main Pole	Sub Pole	Dia. of Clam Hold	weight
7122-0004	60kg	60x50x55	φ12x176	φ10x150	φ6/φ8	1.5kg
7122-0005	80kg	60x50x55	φ12x176	φ10x150	φ6/φ8	1.5kg
7122-0010	100kg	73x50x55	φ16x255	φ14x165	φ6/φ8	2.3kg
7122-0015	130kg	117x50x55	φ20x355	φ14x210	φ6/φ8	3.7kg
7123-1004	60kg	60x50x55	φ12x176	φ10x150	φ4/φ8/3/8"	1.5kg
7123-1005	80kg	60x50x55	φ12x176	φ10x150	φ4/φ8/3/8"	1.5kg
7123-1010	100kg	73x50x55	φ16x255	φ14x165	φ4/φ8/3/8"	2.3kg
7123-1015	130kg	117x50x55	φ20x355	φ14x210	φ4/φ8/3/8"	3.7kg

MAGNETIC STAND

WITH FLEXIBLE JOINTED ARM



- Flexible, strong and precise rotary jointed arms, which can adjust to any position
- Ball joints enables quick and easy positioning, all three joints are controlled by a tightening knob
- With central locking mechanism
- Clamping force can be continuously adjusted, with high stability
- With clamp hole, dovetail groove, which can clamp many types of indicators
- 150° V-grooved base, can be placed on the cylindrical surfaces for easily fixing the indicators
- On/off switch for magnet, easy to move the base without the influence of magnetic force

Unit:mm

Code	Holding Power	Base	Arm length	L1	L2	L3	Dia. of Clam Hold	Weight
7312-0005	30kg	35x30x35	158	56	51	17	φ6/φ8/Devotail	0.4kg
7312-0010	80kg	60x50x55	310	110	101	73	φ6/φ8/Devotail	1.4kg
7312-0015	100kg	73x50x55	385	147	130	76	φ6/φ8/Devotail	1.8kg
7312-0020	130kg	117x50x55	635	285	225	76	φ6/φ8/Devotail	5.0kg

MAGNETIC BASE



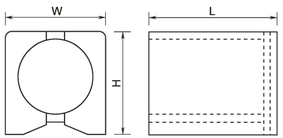

- 150° V-grooved base can be placed on the cylindrical surfaces for easily fixing the indicators
- Carefully selected ferrite permanent magnet with inspected magnetic force which is greater than calibration value
- On/off switch for magnet, easy to move the base without the influence of magnetic force
- Blue wrinkle finish on non-working surfaces

Unit:mm

Code	Holding Power	size(LxWxH)	Thread	Magnet Type	Weight
7000-0005	80kg	60x50x55	M8x1.25	Ferrite	1.0kg
7000-0010	100kg	73x50x55	M8x1.25	Ferrite	1.3kg
7000-0015	130kg	117x50x55	M8x1.25	Ferrite	2.0kg
7000-0020	30kg	35x30x35	M5x0.8	NdFeB	0.2kg

MAGNETIC STAND





● 7511-0005

- Small shape ensures easy and fast fixing to machine
- With two round permanent magnets (7521-0005), with laminated permanent magnets and V-grooved base (7521-0010), without magnet on/off switch
- Low height enables fast, safe and easy mounting on machines and jigs
- Black enamel finish

Unit:mm

Code	Holding Power	Base	Stem	Dia. of Clam Hold	Weight
7511-0005	15kg	φ30x25	65	φ6/φ8/Devotail	200g
7521-0005	20kg	73x37x12	/	φ8	160g
7521-0010	20kg	73x37x26	/	φ8	300g

MICROMETER STAND

WITH MAGNETIC BASE



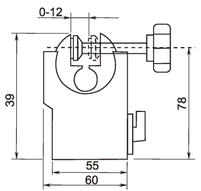

- Keep hands free for operating micrometer and positioning workpiece
- Perfect for batch or mass production measurements in manufacturing and quality assurance
- Proper weight and low center of gravity ensure stable base
- Blue enamel finish

Unit:mm

Code	Capacity	Magnetic	Weight
7111-1000	up to 300/12"	with magnetic base	0.8kg

MICROMETER STAND

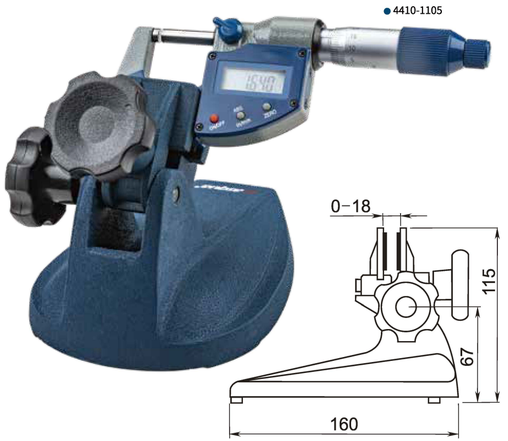

- Keep hands free for operating micrometer and positioning workpiece
- Perfect for batch or mass production measurements in manufacturing and quality assurance
- 150° V-grooved base can be placed on the cylindrical surfaces for easily fixing the indicators
- On/off switch for magnet, easy to move the base without the influence of magnetic force
- Blue enamel finish

Without digital micrometer, which can be found and ordered in page 41

Unit:mm

Code	Capacity	Magnetic
7111-1105	up to 100/4"	without magnetic base

SURFACE GAUGE

WITH SWITCHABLE MAGNETIC BASE

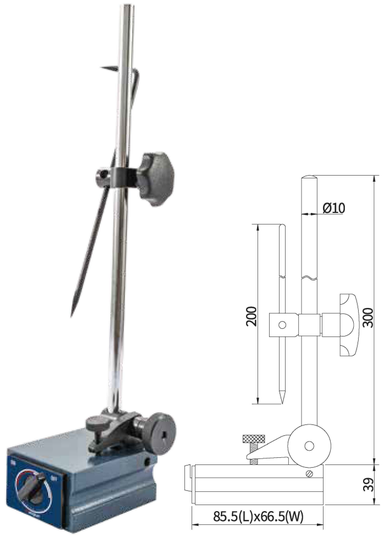

- Combine the surface gauge and magnetic base in one
- Magnetic base embedded with permanent magnet and having on/off switch, magnetic pull of 80kg
- Scriber head is hardened
- Hardened, ground, and lapped steel base for high stability
- Base with fine adjustment function

Unit:mm

Code	Holding Power	Dia. of Clam Hold	Main Pole	Remark
7123-0005	80kg	φ4&3/8"	φ8x230	with Fine Adjustment

MINI LED LIGHT

WITH MAGNETIC BASE



- Great for auto preparation work
- Lens “zoom” for concentrated lighting
- Articulating flex shaft allows easy and accurate positioning
- Flexible shaft of 120mm with universal movement
- Magnetic base with good magnetic pull of 12kg
- LED flashlight requires 3 AAA batteries, and flashlight is removable
- Brightness can be adjusted to dark, bright and mild

Unit:mm

Code	Weight
7611-0020	0.4kg

PRECISION GRANITE COMPARATOR STAND



- Easy maintenance due to the non-rusting base
- The rigid granite base is free from burrs and pileups due to its fine-grain composition and less viscousness compared with casting iron
- The flatness is always accurate and the workpiece is free from damage
- Used for indicator of Dia.8mm and 3/8"
- Measuring surface are precision ground and diamond lapped

Unit:mm

Code	Pole	Base	Dia. of Clam Hold	Weight
7912-0004	φ25x180	150x100x40	φ8/3/8"	2.9kg
7912-0005	φ30x300	210x150x50	φ8/3/8"	7.0kg
7912-0010	φ30x300	300x200x60	φ8/3/8"	11.6kg

PRECISION GRANITE COMPARATOR STAND

WITH FINE ADJUSTMENT



- Used for the measuring room and calibration laboratory
- Easy maintenance due to the non-rusting base
- The rigid granite base is free from burrs and pileups due to its fine-grain composition and less viscousness compared with cast iron
- The flatness is always accurate and the workpiece is free from damage
- Measuring surface fine ground and diamond lapped
- Hardened column with height adjustment and setting ring
- Dial indicator shank φ8 mm
- With fine adjustment over the entire travel

Unit:mm

Code	Base	Pole	Dia. of Clam Hole
7812-0015	300x200x60	φ30x300	φ8/3/8"

PRECISION GRANITE COMPARATOR STAND

WITH CAST IRON ANVIL



- Rapid positioning with coarse adjustment
- Heavy duty upright column and adjustable support arm ensure the high stability
- Upright column is made stainless steel and precision ground
- Round cast iron base

Unit:mm

Code	Pole	Base	Dia. of Clam Hold
7712-0005	φ25x180	φ60	φ8/3/8"
7712-0030	φ25x180	80x80	φ8/3/8"

PRECISION MEASURING TABLE

WITH CERAMIC ANVIL



- Strong cast iron base with rigid column and sturdy indicator holder
- Indicator holder φ8 mm
- The table is of high-quality ceramic,lapped
- Ra⩽0.1μm

Unit:mm

Code	Pole	Base	Dia. of Clam Hold	Weight
7712-0020	φ25x180	φ60	φ8/3/8"	1.6kg
7712-0025	φ25x180	80x80	φ8/3/8"	2.5kg

HEAVY DUTY PRECISION BENCH CENTER



- Used to make fast and precise checks of runout on cylindrical/tapered parts
- Base and center-stocks are made of stress-relieved and aged cast iron
- Centers are made of hardened and precision ground steel
- Extra heavy duty adjustable indicator holder included
- Quick release centers, #2 Morse taper centers
- Head stock can be adjusted lengthwise and locked securely in any position by special lever type handle

Unit:mm

Code	Distance between two centers	Center height	Range	Accuracy	
				Parallelism(μm)	Verticality(μm)
7851-0005	200	100	φ200	⩽8	⩽5
7851-0006	300	100	φ200	⩽8	⩽5
7851-0007	300	170	φ340	⩽8	⩽5
7851-0008	300	300	φ600	⩽8	⩽5
7851-0009	500	170	φ340	⩽8	⩽5
7851-0011	500	300	φ600	⩽8	⩽5
7851-0013	1000	300	φ600	⩽10	⩽8
7851-0014	1500	250	φ500	⩽20	⩽16
7851-0015	2000	230	φ460	⩽30	⩽20
7851-0016	2500	300	φ560	⩽30	⩽30

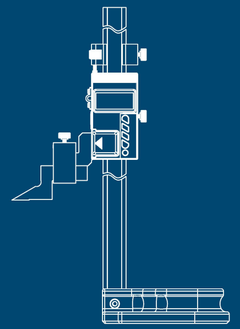

HEIGHT GAUGES

BORN IN ITALY, RAISED BY THE WORLD

VERNIER HEIGHT GAUGE

MADE OF STAINLESS STEEL

- Designed for scribing from a vertical base
- Stain chrome finished scales for glare-free reading
- At zero-position the scriber coincides exactly with the base
- Carbide tipped scriber for sharp, clean lines
- Beam and slider are made of stainless steel
- Dustproof shield optional



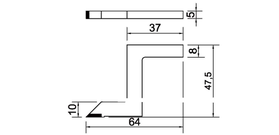

● 3001-4105 For:3001-0105,Range:0-300/0-12"

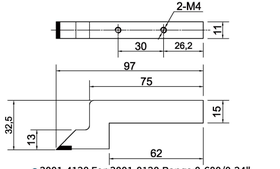

● 3001-4120 For:3001-0120,Range:0-600/0-24"

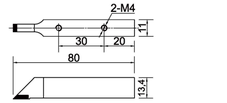

● 3001-4125 For:3001-0125,Range:0-1000/0-40"

Unit:mm

Code	Range	Graduation	Accuracy
3001-0105	0-300/0-12"	0.02/0.001"	±2Graduation
3001-0120	0-600/0-24"	0.02/0.001"	±3.5Graduation
3001-0125	0-1000/0-40"	0.02/0.001"	±3.5Graduation

HEIGHT GAUGE WITH MAGNIFIER

WITH ADJUSTABLE MAIN BEAM

- Magnifier for easier reading
- Adjustable main beam to set the zero reference point
- Made of stainless steel, widened and thickened
- Carbide tipped scriber for sharp, clean lines
- With fine adjustment
- Satin chrome-finished scales
- Base hardened, ground and lapped for maximum flatness
- Dustproof shield optional

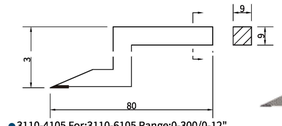

● 3110-4105 For:3110-6105 Range:0-300/0-12"

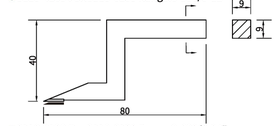

● 3110-4120 For:3110-6120 Range:0-600/0-24"

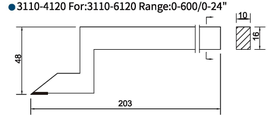

● 3110-4125 For:3110-6125 Range:0-1000/0-40"

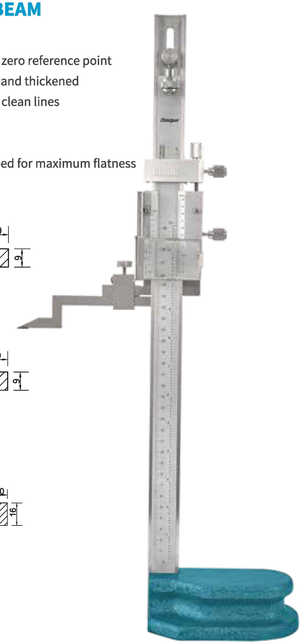

Unit:mm

Code	Range	Graduation	Accuracy
3110-6105	0-300/0-12"	0.02/0.001"	±0.03
3110-6120	0-600/0-24"	0.02/0.001"	±0.06
3110-6125	0-1000/0-40"	0.02/0.001"	±0.06

IP65 WATER PROOF HEAVY DUTY DIGITAL HEIGHT GAUGE

- With large and smooth slider-feed wheel to greatly improve the measuring accuracy
- Carbide tipped scriber for sharp, clean lines
- Made of stainless steel, widened and thickened
- With SPC data output
- Rigid, heavy duty beam and base
- Dustproof shield optional

Data output | Battery CR2032 | mm/inch | IP65 COOLANT PROOF RESISTANT



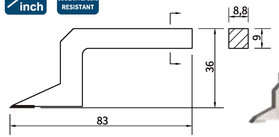

- 3130-4103 For:3130-4703 Range:0-300/0-12"
- 3130-4103 For:3130-4716 Range:0-600/0-24"
- 3130-4103 For:3230-4705 Range:0-300/0-12"
- 3130-4103 For:3230-4710 Range:0-600/0-24"

Unit:mm

Code	Range	Resolution	Accuracy
3130-4703	0-300/0-12"	0.001/0.00005"	0.02/0.0008"
3130-4716	0-600/0-24"	0.001/0.00005"	0.04/0.0015"

WITH WIRELESS TRANSMISSION

Unit:mm

Code	Range	Resolution	Accuracy
3230-4705	0-300/0-12"	0.001/0.00005"	0.02/0.0008"
3230-4710	0-600/0-24"	0.001/0.00005"	0.04/0.0015"

DIGITAL HEIGHT GAUGE

WITH ABSOLUTE LINEAR ENCODER

- Built-in absolute liner encoder, no need to set the reference point at every power-on
- Carbide tipped scriber for sharp, clean lines
- With SPC data output
- Large, easy-to-read LCD display
- Rigid, heavy duty beam and base
- Dustproof shield optional

mm/in | Absolute

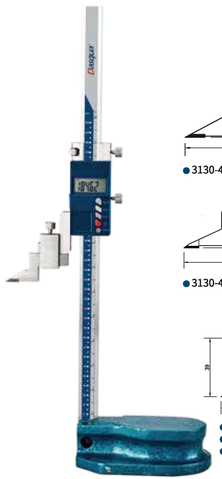

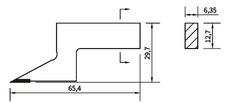

- 3130-4115 For:3130-8115 Range:0-300/0-12"

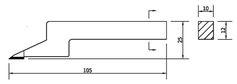

- 3130-4125 For:3130-8125 Range:0-600/0-24"

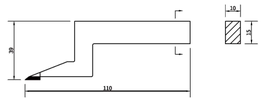

- 3130-4130 For:3130-8130 Range:0-1000/0-40"
- 3130-4130 For:3130-8135 Range:0-1500/0-60"
- 3130-4130 For:3130-8140 Range:0-2000/0-80"

Unit:mm

Code	Range	Resolution	Accuracy
3130-8115	0-300/0-12"	0.01/0.0005"	±0.04
3130-8125	0-600/0-24"	0.01/0.0005"	±0.05
3130-8130	0-1000/0-40"	0.01/0.0005"	±0.07
3130-8135	0-1500/0-60"	0.01/0.0005"	±0.11
3130-8140	0-2000/0-80"	0.01/0.0005"	±0.14

DOUBLE-BEAM DIAL HEIGHT GAUGE

WITH DIGIT COUNTER

- Provided with a dial and two digit counters for more accurate reading
- Double-beam ensures higher measuring accuracy
- One counter reads in the plus direction and the other reads in the minus direction
- With a feed wheel on the back
- Carbide tipped scriber for sharp, clean lines
- Both counters and dial can be re-zeroed at any scriber position
- Base hardened, ground and lapped for maximum flatness
- Dustproof shield optional

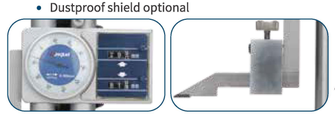

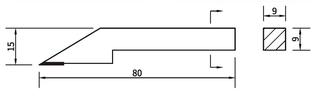

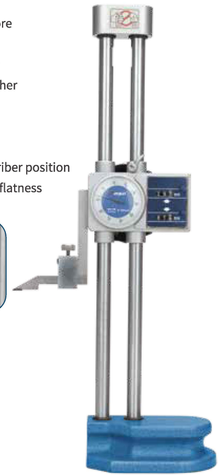

- 3230-4105 For:3221-1105 Range:0-300
- 3230-4105 For:3221-1110 Range:0-500
- 3230-4105 For:3221-1115 Range:0-600
- 3230-4105 For:3221-1120 Range:0-1000
- 3230-4105 For:3222-4205 Range:0-12"
- 3230-4105 For:3222-4210 Range:0-20"
- 3230-4105 For:3222-4215 Range:0-24"
- 3230-4105 For:3222-4220 Range:0-40"

Unit:mm

Code	Range	Graduation	Counter Resolution	Accuracy
3221-1105	0-300	0.01	1	±0.04
3221-1110	0-500	0.01	1	±0.05
3221-1115	0-600	0.01	1	±0.05
3221-1120	0-1000	0.01	1	±0.07
3222-4205	0-12"	0.001"	0.1"	±0.0015"
3222-4210	0-20"	0.001"	0.1"	±0.002"
3222-4215	0-24"	0.001"	0.1"	±0.002"
3222-4220	0-40"	0.001"	0.1"	±0.0030"

DOUBLE-BEAM DIGITAL HEIGHT GAUGE

- Double-beam ensures higher measuring accuracy
- Long carbide tipped scriber for sharp, clean lines
- Rigid, heavy duty construction for industry use
- With SPC data output
- With a feed wheel on the back
- Base hardened, ground and lapped for maximum flatness
- Zero-setting at any position
- Dustproof shield optional



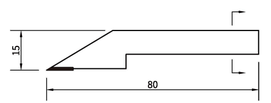

- 3230-4105 For:3230-8105 Range:0-300/0-12"
- 3230-4105 For:3230-8110 Range:0-500/0-20"
- 3230-4105 For:3230-8115 Range:0-600/0-24"
- 3230-4105 For:3230-8116 Range:0-1000/0-40"

Unit:mm

Code	Range	Resolution	Accuracy
3230-8105	0-300/0-12"	0.01/0.001"	±0.04
3230-8110	0-500/0-20"	0.01/0.001"	±0.05
3230-8115	0-600/0-24"	0.01/0.001"	±0.05
3230-8116	0-1000/0-40"	0.01/0.001"	±0.07

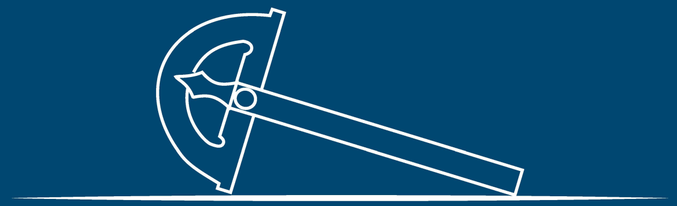

ANGLE MEASURING

BORN IN ITALY, RAISED BY THE WORLD

4 PCS COMBINATION SQUARE SET

- Made by procoated mold and no blister on the surface

Unit:mm

Code	Ruler	Graduation
1012-2010-A	300/12"	1.0/1/64" and 0.5/1/32"

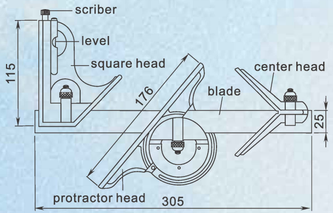

- Distinct lines and figures against the satin chrome finish making reading easily

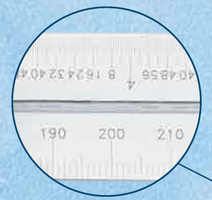



- Powder-coated process guaranteeing high surface durability

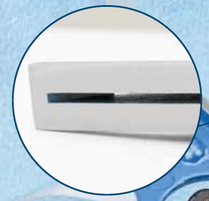

- Low surface roughness and high accuracy with surfaces precisely ground

- Strong and elegant packing



4PCS COMBINATION DIGITAL SQUARE SET





- Higher accuracy with digital protractor newly applied
- Made by procoated mold and no blister on the surface
- Distinct lines and figures against the satin chrome finish making reading easily
- Low surface roughness and high accuracy with surfaces precisely ground

Unit:mm

Code	Ruler	Graduation	Accuracy
1012-0010	300/12"	1.0/1/64" and 0.5/1/32"	±10'within0.15°

PROTRACTOR



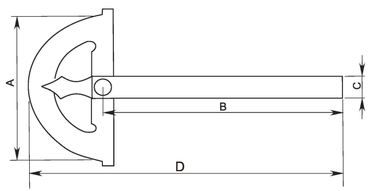

- Made of stainless steel
- Satin chrome finish, anti-rust and durable
- Locking knob can hold any angle
- Multi-purpose, engineering drawing, angle measurement, architectural design, woodworking, length measurement, etc
- Packaged in a beautiful and durable leather bag

Unit:mm

Code	Range	Graduation	Size(**AxB**)	**D**	**C**	Accuracy
1011-1005	0-180°	1°	85x150	199	15	±30'
1012-1005	0-180°	1°	80x120	168	11	±30'
1012-1010	0-180°	1°	120x150	220	14	±30'
1012-1020	0-180°	1°	150x200	285	16	±30'
1012-1030	0-180°	1°	200x300	413	20	±30'
1012-1035	0-180°	1°	300x500	665.5	31.5	±30'

UNIVERSAL PROTRACTOR

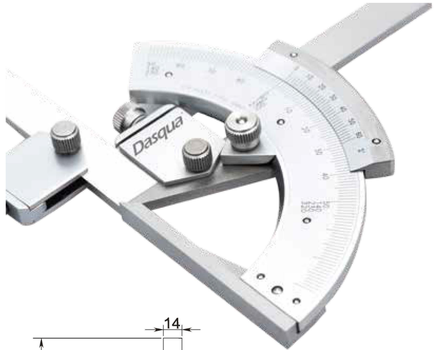

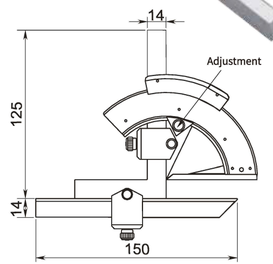

- Made of stainless steel
- With fine adjustment
- Measuring surface hardened, ground and lapped ensures smooth movement
- Satin chrome finish, anti-rust and durable

Unit:mm

Code	Range	Graduation	Accuracy
1012-2005	0-320°	2'	±2'

UNIVERSAL PROTRACTOR

WITH FINE ADJUSTMENT AND MAGNIFIER



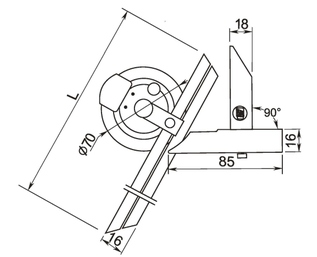

- Made of stainless steel
- With a magnifier for easy and clear reading
- Measuring surface hardened, ground and lapped ensures smooth movement
- Satin chrome finish, anti-rust and durable
- With fine adjustment
- Provided with three blades (150mm, 200mm, 300mm)

Unit:mm

Code	Range	Graduation	**L**	Accuracy
1031-2005	0-360°	5'	150/200/300	±5'

UNIVERSAL DIAL PROTRACTOR





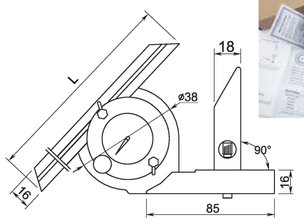

- Made of stainless steel
- With a dial for easy and accurate reading
- Measuring surface hardened, ground and lapped ensures smooth movement
- Satin chrome finish, anti-rust and durable
- Provided with three blades (150mm, 200mm, 300mm)

Unit:mm

Code	Range	Graduation	L	Accuracy
1031-2010	0-360°	5′	150/200/300	±5′

INDUSTRIAL DIGITAL PROTRACTOR

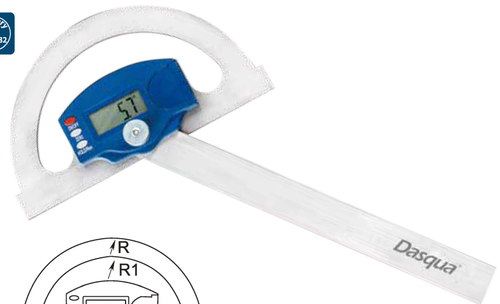

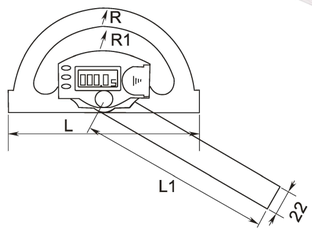

- Measuring range: 0-180°
- Big LCD display for easy and clear reading
- Stainless steel scale, measuring surface hardened, ground and lapped
- Locking knob can hold any angle
- Data hold function, zero setting at any position
- Satin chrome finish, anti-rust and durable

Unit:mm

Code	Range	Size	Resolution	L	L1	R	R1	Accuracy
1022-1005	0-180°	120x150	0.05°	132	161.5	60	/	±15′
1022-1010	0-180°	150x200	0.05°	158	211.5	75	60	±15′
1022-1015	0-180°	200x300	0.05°	221	311.5	98	78	±15′

UNIVERSAL DIGITAL PROTRACTOR

Data output



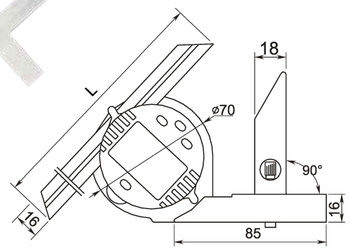

L=150MM/200MM/300MM

- Made of stainless steel
- Large digital display for easy reading
- Measuring surface hardened, ground and lapped ensures smooth movement
- Satin chrome finish, anti-rust and durable
- Provided with three blades (150mm, 200mm, 300mm)

Unit:mm

Code	Range	Resolution	L	Accuracy
1021-2005	0-360°	10"	150/200/300	±5′

STAINLESS DIGITAL PROTRACTOR



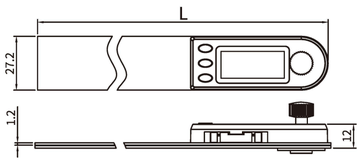

- For easy measurement and transfer of angles
- Easy-to-read display
- With clamping screw to lock the blades
- Automatic power off
- Numeric value can be rotated through 180°
- Zero-setting at any position
- Upper and lower edges both with 1 mm graduations

Unit:mm

Code	Size	Range	Resolution	L	Accuracy
1022-0200	200	0-360°	0.05°	277	±0.2°
1022-0300	300	0-360°	0.05°	380	±0.2°

45°SQUARE

WITH WIDE BASE

DIN 875



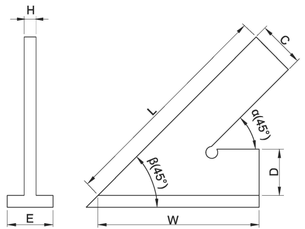

- Precision ground base for measuring and checking the flatness error
- Strictly made in accordance with DIN875
- Made of hardened stainless steel
- Satin chrome finish for glare-free easy reading
- Measuring surfaces are precision ground and lapped

Unit:mm

Code	Standard	Size(LxW)	Angle Tolerance	C	D	H	E
9222-3105	DIN875/2	120x80	0.030	20	20	5	20
9222-3110	DIN875/2	150x100	0.035	20	20	5	20
9222-3115	DIN875/2	200x130	0.040	25	25	6	25

60°SQUARE

WITH WIDE BASE

DIN 875



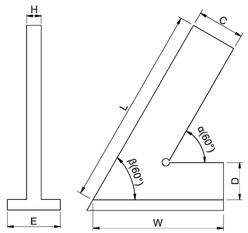

- Precision ground base for measuring and checking the flatness error
- Strictly made in accordance with DIN875
- Made of hardened stainless steel
- Satin chrome finish for glare-free easy reading
- Measuring surfaces are precision ground and lapped

Unit:mm

Code	Standard	Size(LxW)	Angle Tolerance	C	D	H	E
9272-1005	DIN875/2	120x80	0.030	20	20	5	20
9272-1010	DIN875/2	150x100	0.035	20	20	5	20
9272-1015	DIN875/2	200x130	0.040	25	25	6	25

90°BEVELED EDGE SQUARE

DIN 875



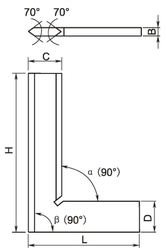

- Strictly made in accordance with DIN875
- Beveled edges can be used for inside and outside measurement
- Made of hardened stainless steel
- Measuring surfaces are precision ground and lapped

GRADE 0

Unit:mm

Code	Standard	Size(HxL)	Angle Tolerance	C	D	B
9111-1104	DIN875/0	40x28	0.006	4	6	3.5
9111-1105	DIN875/0	50x40	0.006	13	13	4
9111-1110	DIN875/0	75x50	0.007	15	15	4
9111-1115	DIN875/0	100x70	0.007	20	20	5
9111-1120	DIN875/0	150x100	0.008	30	30	6
9111-1125	DIN875/0	200x130	0.009	33	33	7

GRADE 00

Unit:mm

Code	Standard	Size(HxL)	Angle Tolerance	C	D	B
9100-1102	DIN875/00	25x20	0.003	4	6	3.5
9100-1104	DIN875/00	40x28	0.003	4	6	3.5
9100-1105	DIN875/00	50x40	0.003	13	13	4
9100-1110	DIN875/00	75x50	0.003	15	15	4
9100-1115	DIN875/00	100x70	0.003	20	20	5
9100-1120	DIN875/00	150x100	0.004	30	30	6
9100-1125	DIN875/00	200x130	0.004	33	33	7

90°FLAT EDGE SQUARE

DIN 875



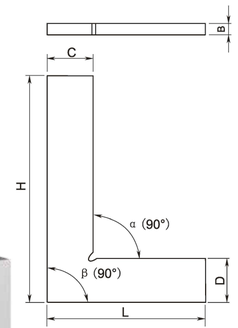

- Used for checking the straightness,parallelism and perpendicularity
- Strictly made in accordance with DIN875
- Made of hardened stainless steel
- Satin chrome finish for glare-free easy reading
- Measuring surfaces are precision ground and lapped

Unit:mm

Code	Standard	Size(HxL)	Angle Tolerance	C	D	B
9315-1105	DIN875/0	50x40	0.006	15	15	4
9315-1110	DIN875/0	75x50	0.007	15	15	4
9315-1115	DIN875/0	100x70	0.007	20	20	5
9315-1120	DIN875/0	150x100	0.008	30	30	6
9315-1125	DIN875/0	200x130	0.009	30	30	7

90°FLAT EDGE SQUARE

WITH HEAVY BASE

DIN 875

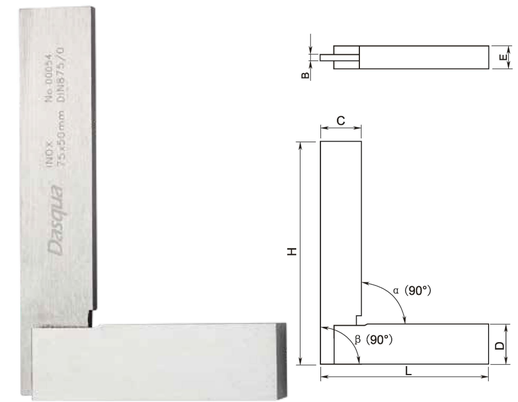

- Precision ground base for measuring and checking the flatness error
- Used for checking the straightness,parallelism and perpendicularity
- Strictly made in accordance with DIN875
- Made of hardened stainless steel
- Satin chrome finish for glare-free easy reading
- Measuring surfaces are precision ground and lapped

Unit:mm

Code	Standard	Size(HxL)	Angle Tolerance	C	D	B	E
9212-1104	DIN875/0	50x40	0.006	12	12	2.5	10
9212-1108	DIN875/0	75x50	0.007	14	14	3	10
9212-1112	DIN875/0	100x70	0.007	18	18	3	12
9212-1116	DIN875/0	150x100	0.008	22	22	4	12
9212-1118	DIN875/0	200x130	0.009	26	26	4	14

90°FLAT EDGE SQUARE

WITH WIDE BASE

DIN 875

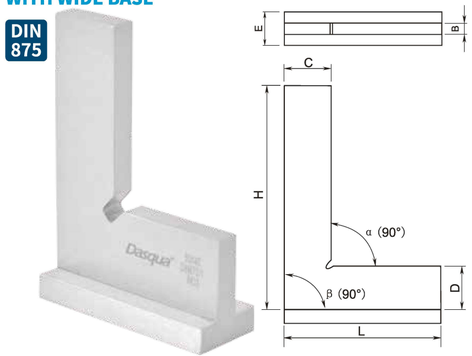

- Precision ground base for measuring and checking the flatness error
- Used for checking the straightness,parallelism and perpendicularity
- Strictly made in accordance with DIN875
- Made of hardened stainless steel
- Satin chrome finish for glare-free easy reading
- Measuring surfaces are precision ground and lapped

Unit:mm

Code	Standard	Size(HxL)	Angle Tolerance	C	D	B	E
9212-1105	DIN875/0	50x40	0.006	15	15	4	15
9212-1110	DIN875/0	75x50	0.007	15	15	4	15
9212-1115	DIN875/0	100x70	0.007	20	20	5	20
9212-1120	DIN875/0	150x100	0.007	30	30	6	30
9212-1125	DIN875/0	200x130	0.009	30	30	7	30
9211-1105	DIN875/1	50x40	0.012	15	15	4	15
9211-1110	DIN875/1	75x50	0.014	15	15	4	15
9211-1115	DIN875/1	100x70	0.015	20	20	5	20
9211-1120	DIN875/1	150x100	0.018	30	30	6	30
9211-1125	DIN875/1	200x130	0.020	30	30	7	30

135°SQUARE

WITH WIDE BASE

DIN 875

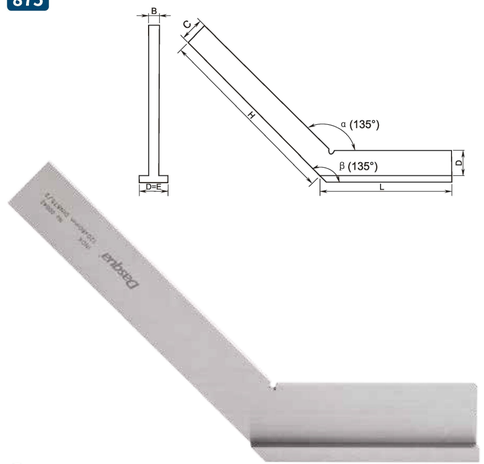

- Precision ground base for measuring and checking the flatness error
- Strictly made in accordance with DIN875
- Made of hardened stainless steel
- Satin chrome finish for glare-free easy reading
- Measuring surfaces are precision ground and lapped

Unit:mm

Code	Standard	Size(HxL)	Angle Tolerance	C	D	B
9222-3102	DIN875/2	120x80	0.030	20	20	5
9222-3104	DIN875/2	150x100	0.035	20	20	5
9222-3106	DIN875/2	200x130	0.040	30	30	7

STAINLESS STEEL STRAIGHT EDGE

DIN 874



- Use with feeler gauge or light gap method to measure the straightness and parallelism
- Strictly made in accordance with DIN874
- With one beveled edge
- Made of hardened stainless steel
- Satin chrome finish for glare-free easy reading
- Measuring surfaces are precision ground and lapped

Unit:mm

Code	Standard	Size(L)	Angle Tolerance	H	W
9131-2105	DIN874/00	75	0.0015	25	5
9131-2110	DIN874/00	100	0.0017	25	5
9131-2115	DIN874/00	125	0.0018	30	6
9131-2120	DIN874/00	150	0.0020	30	6
9131-2125	DIN874/00	200	0.0023	30	6

ADJUSTABLE BEVEL SQUARE

DIN 875



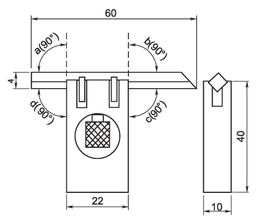

- Use with light gap method for inspection work
- Used to measure the short or small parts, chamfers and others by moving the straight edge
- High precision square, smooth straight edge which can be locked by the clamping screw at the desired position
- Measuring surfaces are precision ground and lapped
- Made of hardened stainless steel

Unit:mm

Code	Standard	Foot Size	Ruler Length	Ruler Cross Section
9161-1105	DIN875/0	40x22x10	60	4x4

5 PCS MECHANIST SQUARE SET



DIN 874 DIN 875

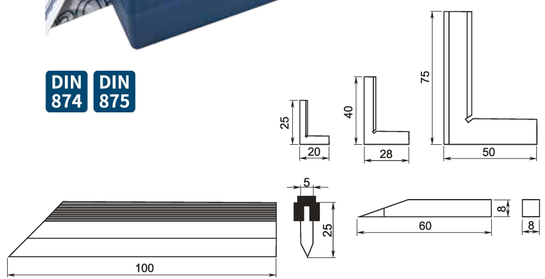

- Measuring surfaces are precision ground and lapped
- Satin chrome finish for glare-free easy reading
- Stainless steel beveled straight edge 100mm grade 00 (DIN 874)
- Stainless steel beveled edge squares 75x50mm grade 00 (DIN 875)
- Stainless steel beveled edge squares 40x28mm and 25x20 grade 00
- Gauge block scriber point 60x8x8mm grade 00

Unit:mm

Code
9383-2205

MEASURING BEVEL



- Made of hardened stainless steel
- Used to duplicate any angle
- Two movable blades can be locked by the wing nut
- Measuring surfaces are precision ground and lapped

Unit:mm

Code	Size
9251-1105	200
9251-1110	250
9251-1115	300
9251-1120	400
9251-1125	500

ANGLE BLOCK SET



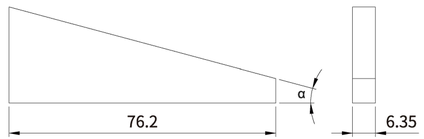

- For fast, easy and accurate determination of angular dimensions
- Also can be stacked to create other angles
- Hardened and relieved special steel, high grade of abrasion resistance
- Measuring faces precision ground and lapped

Unit:mm

Code	Amount(pcs)	Angle(α)	Angular Precision
9411-1205	10	1°, 2°, 3° ,4° ,5°, 10°, 15°, 20° ,25°, 30°	±20"
9412-4105	12	1/4°, 1/2°, 1°, 2°, 3°, 4° ,5° ,10°, 15° ,20°, 25° ,30°	±20"

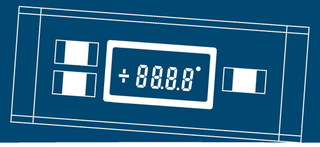

PRECISION LEVEL

BORN IN ITALY, RAISED BY THE WORLD

MASTER PRECISION LEVEL

WITH WOODEN HANDLE

- Used to measure the angle of inclination, flatness and straightness of the machine guide rails, horizontal and vertical position of equipment setup in machinery industry and instrument manufacturing

Unit:mm

Code	Range	Graduation
8301-1005-B	150	0.02
8301-1010-B	200	0.02
8301-1015-B	250	0.02
8301-1020-B	300	0.02

- With more artistic wooden handle rather than normal plastic handle
- Strictly made in accordance with DIN877
- V-grooved base for ease of mount on cylindrical parts

DIN 877



- The glass bubble is of great sensitivity and high transparency,easy for operators to read.
- Screw to adjust bubble
- Special lapped,hardened and polished steel body with flawless surfaces Flatness at 0.003mm

PRECISION FRAME LEVEL

WITH WOODEN HANDLE

- Used to measure the angle of inclination, flatness and straightness of the machine guide rails, horizontal position and vertical position of equipment setup in machinery industry and instrument manufacturing
- With more artistic wooden handle rather than normal plastic handle
- The glass bubble is of great sensitivity and high transparency, easy for operators to read
- The bubble is adjustable
- Strictly made in accordance with DIN877
- Special lapped, hardened and polished steel body with no blister on the surface
- V-grooved base for ease of mount on cylindrical parts

Unit:mm

Code	Range	Graduation
8301-1003-B	150 x 150	0.02
8301-1006-B	200 x 200	0.02
8301-1009-B	250 x 250	0.02
8301-1013-B	300 x 300	0.02



DIN 877

PRECISION LEVEL

- Strictly made in accordance with DIN877
- Used to measure the straightness and flatness of machine guide rails
- Robust cast iron model, precision ground measuring surface ensures high accuracy
- Base with V-groove to allow use on round bars and shafts, cylindrical surfaces
- With main vial and cross test vial

DIN 877



Unit:mm

Code	Range	Graduation
8301-0005-A	150	0.05
8301-0010-A	200	0.05
8301-0015-A	250	0.05
8301-0020-A	300	0.05
8301-1005-A	150	0.02
8301-1010-A	200	0.02
8301-1015-A	250	0.02
8301-1020-A	300	0.02
8302-0005-A	6"	0.0005"
8302-0010-A	8"	0.0005"
8302-0015-A	10"	0.0005"
8302-0020-A	12"	0.0005"

PRECISION FRAME LEVEL

DIN 877



- Strictly made in accordance with DIN877
- Used to measure the straightness and flatness of machine guide rails
- Robust cast iron model, precision ground measuring surface ensures high accuracy
- Base with V-groove to allow use on round bars and shafts

Unit:mm

Code	Range	Graduation
8301-0003-A	150 x 150	0.05
8301-0006-A	200 x 200	0.05
8301-0009-A	250 x 250	0.05
8301-0013-A	300 x 300	0.05
8301-1003-A	150 x 150	0.02
8301-1006-A	200 x 200	0.02
8301-1009-A	250 x 250	0.02
8301-1013-A	300 x 300	0.02
8302-0003-A	6" x 6"	0.0005"
8302-0006-A	8" x 8"	0.0005"
8302-0009-A	10" x 10"	0.0005"
8302-0013-A	12" x 12"	0.0005"

DIGITAL ANGLE GAUGE

- Large easy-to-read backlight LCD display
- Absolute 0° measuring at level surface
- Measure relative bevel
- With permanent strong magnet on measuring faces
- CNC machined aluminum body

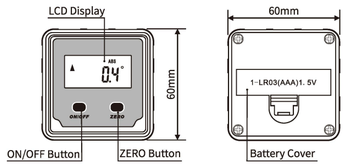



Code	Range	Resolution	Accuracy
8400-0010	4x90°	0.1°	±0.2°

DIGITAL LEVEL

- Large easy-to-read backlight LCD display with hold function
- With horizontal and vertical vials
- Absolute level measuring, relative angle measuring, slope and angle conversion
- With embedded strong permanent magnet on measuring face
- CNC machined super flat edges



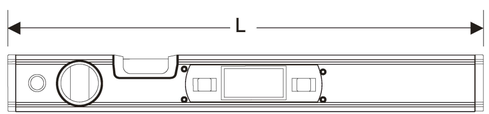

Unit:mm

Code	Magnet	Range	Resolution	L	Accuracy
8301-2640	NO	4x90°	0.1°	400	0.2°
8301-2645	YES	4x90°	0.1°	400	0.2°

DIGITAL PROTRACTOR

- Absolute function, zero setting is unnecessary when the battery is replaced
- Used as level and inclinometer to measure the included angle of non-continuous working surfaces
- V-groove base with powerful embedded magnets, which secures strong attachment to the measuring surfaces (including cylindrical surface)
- Backlight function enables it to use in the dim place
- IP65 dust-proof and water-proof

ABSOLUTE IP65 COOLANT/FLUID RESISTANT



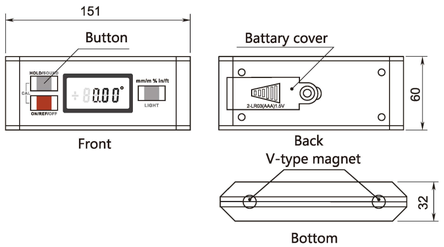





Code	Range	Resolution	Accuracy
8400-0005	4 x 90°	0.1°	0°-90°:±0.05° Rest of angle:±0.15°

CALIBRATION GAUGE BLOCK

BORN IN ITALY, RAISED BY THE WORLD

GAUGES PRIME

Made in Europe

One of the very few qualified threading gauge suppliers serving European industrial market!

DIN ISO 1502

- All Thread Parameters per Pitch Inspection according to ISO Thread DIN ISO 1502 Standard
- With calibration certificate





- Vacuum hardening ensures hardness reaches 58-62HRC Cryogenic treatment can increase the toughness and abrasion resistance significantly, and prolong the service life of the product.



- IAC Screw Thread Inspection Machine

THREAD PLUG GAUGES/GO&NO-GO ISO-METRIC

DIN ISO 1502

- Strictly made in accordance with DIN ISO 1502
- With Go&No-Go ends
- Grade 6H
- Made of premium steel, hardened, cryogenic treatment
- Stable product dimensions, superior surface finish, wear resistance for long service life
- With inspection certificate



Unit:mm

Code	Size	Code	Size	Code	Size
6310-0001	M3*0.5	6310-0027	M8*0.75	6310-0053	M30*1
6310-0002	M4*0.7	6310-0028	M8*1	6310-0054	M30*1.5
6310-0003	M5*0.8	6310-0029	M10*0.75	6310-0055	M30*2
6310-0004	M6*1	6310-0030	M10*1	6310-0056	M32*1.5
6310-0005	M8*1.25	6310-0031	M10*1.25	6310-0057	M33*1.5
6310-0006	M10*1.5	6310-0032	M12*1	6310-0058	M33*2
6310-0007	M12*1.75	6310-0033	M12*1.25	6310-0059	M35*1.5
6310-0008	M14*2	6310-0034	M12*1.5	6310-0060	M36*1.5
6310-0009	M16*2	6310-0035	M14*1	6310-0061	M36*2
6310-0010	M18*2.5	6310-0036	M14*1.25	6310-0062	M38*1.5
6310-0011	M1*0.25	6310-0037	M14*1.5	6310-0063	M40*1.5
6310-0012	M1.4*0.3	6310-0038	M16*1	6310-0064	M40*2
6310-0013	M1.6*0.35	6310-0039	M16*1.5	6310-0065	M42*1.5
6310-0014	M2*0.4	6310-0040	M18*1	6310-0066	M42*2
6310-0015	M2.5*0.45	6310-0041	M18*1.5	6310-0067	M45*1.5
6310-0016	M3.5*0.6	6310-0042	M20*1	6310-0068	M45*2
6310-0017	M20*2.5	6310-0043	M20*1.5	6310-0069	M48*1.5
6310-0018	M22*2.5	6310-0044	M22*1.5	6310-0070	M48*2
6310-0019	M24*3	6310-0045	M24*1	6310-0071	M50*1.5
6310-0020	M27*3	6310-0046	M24*1.5	6310-0072	M50*2
6310-0021	M30*3.5	6310-0047	M24*2	6310-0073	M52*1.5
6310-0022	M33*3.5	6310-0048	M25*1.5	6310-0074	M52*2
6310-0023	M36*4	6310-0049	M26*1.5	6310-0075	M55*1.5
6310-0024	M42*4.5	6310-0050	M27*1.5	6310-0076	M55*2
6310-0025	M48*5	6310-0051	M27*2	6310-0077	M58*1.5
6310-0026	M8*0.5	6310-0052	M28*1.5	6310-0078	M60*2

THREAD PLUG GAUGES/GO&NO-GO ANSI-INCH

ANSI B1.2

- Strictly made in accordance with ANSI B1.2
- With Go&No-Go ends
- Grade 2B
- Made of premium steel, hardened, cryogenic treatment
- Stable product dimensions, superior surface finish, wear resistance for long service life
- With inspection certificate

Code	Size
6311-0001	6-32UNC
6311-0002	8-32UNC
6311-0003	10-24UNC
6311-0004	12-24UNC
6311-0005	1/4"-20UNC
6311-0009	3/8"-16UNC
6311-0013	1/2"-13UNC
6311-0006	1/4"-28UNF
6311-0007	5/16"-18UNC
6311-0008	5/16"-24UNF
6311-0010	3/8"-24UNF
6311-0011	7/16"-14UNC
6311-0012	7/16"-20UNF
6311-0014	1/2"-20UNF

THREAD RING GAUGES

ISO-Metric

DIN ISO 1502

- Strictly made in accordance with DIN ISO 1502
- With Go&No-Go ends
- Grade 6g
- Made of premium steel, hardened, cryogenic treatment
- Stable product dimensions, superior surface finish, wear resistance for long service life
- With inspection certificate



Go Unit:mm

Code	Size	Code	Size	Code	Size
6510-0001-GG	M3*0.5	6510-0027-GG	M8*0.75	6510-0053-GG	M30*1
6510-0002-GG	M4*0.7	6510-0028-GG	M8*1	6510-0054-GG	M30*1.5
6510-0003-GG	M5*0.8	6510-0029-GG	M10*0.75	6510-0055-GG	M30*2
6510-0004-GG	M6*1	6510-0030-GG	M10*1	6510-0056-GG	M32*1.5
6510-0005-GG	M8*1.25	6510-0031-GG	M10*1.25	6510-0057-GG	M33*1.5
6510-0006-GG	M10*1.5	6510-0032-GG	M12*1	6510-0058-GG	M33*2
6510-0007-GG	M12*1.75	6510-0033-GG	M12*1.25	6510-0059-GG	M35*1.5
6510-0008-GG	M14*2	6510-0034-GG	M12*1.5	6510-0060-GG	M36*1.5
6510-0009-GG	M16*2	6510-0035-GG	M14*1	6510-0061-GG	M36*2
6510-0010-GG	M18*2.5	6510-0036-GG	M14*1.25	6510-0062-GG	M38*1.5
6510-0011-GG	M1*0.25	6510-0037-GG	M14*1.5	6510-0063-GG	M40*1.5
6510-0012-GG	M1.4*0.3	6510-0038-GG	M16*1	6510-0064-GG	M40*2
6510-0013-GG	M1.6*0.35	6510-0039-GG	M16*1.5	6510-0065-GG	M42*1.5
6510-0014-GG	M2*0.4	6510-0040-GG	M18*1	6510-0066-GG	M42*2
6510-0015-GG	M2.5*0.45	6510-0041-GG	M18*1.5	6510-0067-GG	M45*1.5
6510-0016-GG	M3.5*0.6	6510-0042-GG	M20*1	6510-0068-GG	M45*2
6510-0017-GG	M20*2.5	6510-0043-GG	M20*1.5	6510-0069-GG	M48*1.5
6510-0018-GG	M22*2.5	6510-0044-GG	M22*1.5	6510-0070-GG	M48*2
6510-0019-GG	M24*3	6510-0045-GG	M24*1	6510-0071-GG	M50*1.5
6510-0020-GG	M27*3	6510-0046-GG	M24*1.5	6510-0072-GG	M50*2
6510-0021-GG	M30*3.5	6510-0047-GG	M24*2	6510-0073-GG	M52*1.5
6510-0022-GG	M33*3.5	6510-0048-GG	M25*1.5	6510-0074-GG	M52*2
6510-0023-GG	M36*4	6510-0049-GG	M26*1.5	6510-0075-GG	M55*1.5
6510-0024-GG	M42*4.5	6510-0050-GG	M27*1.5	6510-0076-GG	M55*2
6510-0025-GG	M48*5	6510-0051-GG	M27*2	6510-0077-GG	M58*1.5
6510-0026-GG	M8*0.5	6510-0052-GG	M28*1.5	6510-0078-GG	M60*2

No-Go Unit:mm

Code	Size	Code	Size	Code	Size
6510-0001-NG	M3*0.5	6510-0027-NG	M8*0.75	6510-0053-NG	M30*1
6510-0002-NG	M4*0.7	6510-0028-NG	M8*1	6510-0054-NG	M30*1.5
6510-0003-NG	M5*0.8	6510-0029-NG	M10*0.75	6510-0055-NG	M30*2
6510-0004-NG	M6*1	6510-0030-NG	M10*1	6510-0056-NG	M32*1.5
6510-0005-NG	M8*1.25	6510-0031-NG	M10*1.25	6510-0057-NG	M33*1.5
6510-0006-NG	M10*1.5	6510-0032-NG	M12*1	6510-0058-NG	M33*2
6510-0007-NG	M12*1.75	6510-0033-NG	M12*1.25	6510-0059-NG	M35*1.5
6510-0008-NG	M14*2	6510-0034-NG	M12*1.5	6510-0060-NG	M36*1.5
6510-0009-NG	M16*2	6510-0035-NG	M14*1	6510-0061-NG	M36*2
6510-0010-NG	M18*2.5	6510-0036-NG	M14*1.25	6510-0062-NG	M38*1.5
6510-0011-NG	M1*0.25	6510-0037-NG	M14*1.5	6510-0063-NG	M40*1.5
6510-0012-NG	M1.4*0.3	6510-0038-NG	M16*1	6510-0064-NG	M40*2
6510-0013-NG	M1.6*0.35	6510-0039-NG	M16*1.5	6510-0065-NG	M42*1.5
6510-0014-NG	M2*0.4	6510-0040-NG	M18*1	6510-0066-NG	M42*2
6510-0015-NG	M2.5*0.45	6510-0041-NG	M18*1.5	6510-0067-NG	M45*1.5
6510-0016-NG	M3.5*0.6	6510-0042-NG	M20*1	6510-0068-NG	M45*2
6510-0017-NG	M20*2.5	6510-0043-NG	M20*1.5	6510-0069-NG	M48*1.5
6510-0018-NG	M22*2.5	6510-0044-NG	M22*1.5	6510-0070-NG	M48*2
6510-0019-NG	M24*3	6510-0045-NG	M24*1	6510-0071-NG	M50*1.5
6510-0020-NG	M27*3	6510-0046-NG	M24*1.5	6510-0072-NG	M50*2
6510-0021-NG	M30*3.5	6510-0047-NG	M24*2	6510-0073-NG	M52*1.5
6510-0022-NG	M33*3.5	6510-0048-NG	M25*1.5	6510-0074-NG	M52*2
6510-0023-NG	M36*4	6510-0049-NG	M26*1.5	6510-0075-NG	M55*1.5
6510-0024-NG	M42*4.5	6510-0050-NG	M27*1.5	6510-0076-NG	M55*2
6510-0025-NG	M48*5	6510-0051-NG	M27*2	6510-0077-NG	M58*1.5
6510-0026-NG	M8*0.5	6510-0052-NG	M28*1.5	6510-0078-NG	M60*2

THREAD RING GAUGES

ANSI-Inch

ANSI B1.2

- Strictly made in accordance with ANSI B1.2
- With Go&No-Go ends
- Grade 2A
- Made of premium steel, hardened, c ryogenic treatment
- Stable product dimensions, superior surface finish, wear resistance for long service life
- With inspection certificate

Go

Code	Size	Code	Size
6511-0001-GG	6-32UNC	6511-0001-NG	6-32UNC
6511-0002-GG	8-32UNC	6511-0002-NG	8-32UNC
6511-0003-GG	10-24UNC	6511-0003-NG	10-24UNC
6511-0004-GG	12-24UNC	6511-0004-NG	12-24UNC
6511-0005-GG	1/4"-20UNC	6511-0005-NG	1/4"-20UNC
6511-0009-GG	3/8"-16UNC	6511-0009-NG	3/8"-16UNC
6511-0013-GG	1/2"-13UNC	6511-0013-NG	1/2"-13UNC
6511-0006-GG	1/4"-28UNF	6511-0006-NG	1/4"-28UNF
6511-0007-GG	5/16"-18UNC	6511-0007-NG	5/16"-18UNC
6511-0008-GG	5/16"-24UNF	6511-0008-NG	5/16"-24UNF
6511-0010-GG	3/8"-24UNF	6511-0010-NG	3/8"-24UNF
6511-0011-GG	7/16"-14UNC	6511-0011-NG	7/16"-14UNC
6511-0012-GG	7/16"-20UNF	6511-0012-NG	7/16"-20UNF
6511-0014-GG	1/2"-20UNF	6511-0014-NG	1/2"-20UNF

No-Go

7PCS THREAD RING GAUGE SET GO&NO-GO

- Strictly made in accordance with DIN ISO 1502
- Strictly made in accordance with ANSI B1.2
- 7pcs go or no-go thread ring gauges of different size
- Measuring faces hardened, ground and lapped
- Made of premium steel, hardened, cryogenic treatment
- Stable product dimensions, superior surface finish, wear resistance for long service life

DIN ISO 1502 ANSI B1.2

Unit:mm

Code	Including	Style
6311-3205	M3,M4,M5.M6,M8,M10,M12	Go Ring Gauge
6311-3203	M3,M4,M5.M6,M8,M10,M12	No-Go Ring Gauge
6311-3105	6-32UNC,8-32UNC,10-24UNC,12-24UNC,1/4"-20UNC, 3/8"-16UNC,1/2"-13UNC	Go Ring Gauge
6311-3106	6-32UNC,8-32UNC,10-24UNC,12-24UNC,1/4"-20UNC, 3/8"-16UNC,1/2"-13UNC	No-Go Ring Gauge





7PCS THREAD PLUG GAUGE SET GO&NO-GO

- Strictly made in accordance with DIN ISO 1502
- Strictly made in accordance with ANSI B1.2
- 7pcs go or no-go thread plug gauges of different size
- Measuring faces hardened, ground and lapped
- Made of premium steel, hardened, cryogenic treatment
- Stable product dimensions, superior surface finish, wear resistance for long service life

DIN ISO 1502 ANSI B1.2

Unit:mm

Code	Including	Style
6311-3202	M3,M4,M5.M6,M8,M10,M12	Go & No-Go Plug Gauge
6311-3110	6-32UNC,8-32UNC,10-24UNC,12-24UNC,1/4"-20UNC, 3/8"-16UNC,1/2"-13UNC	Go & No-Go Plug Gauge

GAUGE BLOCK SET MADE OF CERAMIC

- Made of ceramic materials with high hardness, wear resistance, and long service life which is 5-10 times of steel gauge block, 4-5 times of carbide
- Corrosion resistant, anti-corrosion treatment is unnecessary when handle normally
- Superior fine material, high precision ground, smooth and flat surface, high wringing force
- Strictly made in accordance with DIN ISO 3650
- Hardness 1350HV
- High stability of material
- Non-magnetic and non-conductive, can be used under specific conditions

DIN ISO 3650

Unit:mm

Code	Grade	Piece/Set	Size	Step	Piece
6221-5232	1	32	1.005	/	1
			1.01-1.09	0.01	9
			1.1-1.9	0.1	9
6220-5232	0		1-9	1	9
			10-30	10	3
			50	/	1
6221-5246	1	46	1.001-1.009	0.001	9
			1.01-1.09	0.01	9
			1.1-1.9	0.1	9
6220-5246	0		1-9	1	9
			10-100	10	10
6221-5247	1	47	1.005	/	1
			1.01-1.19	0.01	19
			1.2-1.9	0.1	8
6220-5247	0		1-9	1	9
			10-100	10	10
6221-5287	1	87	1.001-1.009	0.001	9
			1.01-1.49	0.01	49
6220-5287	0		0.5-9.5	0.5	19
			10-100	10	10
6221-5103	1	103	1.005	/	1
			1.01-1.49	0.01	49
6220-5103	0		0.5-24.5	0.5	49
			25-100	25	4
6221-5112	1	112	1.0005	/	1
			1.001-1.009	0.001	9
			1.01-1.49	0.01	49
6220-5112	0		0.5-24.5	0.5	49
			25-100	25	4

PURPOSE

Grade 0: Mainly used in calibration laboratory by specialized inspection staff, as reference standards for calibration of high precision measuring equipment and grade 1 and 2 gauge blocks

Grade 1: Mainly used in laboratory to inspect high precision workpiece, gauge blocks and set measuring equipment



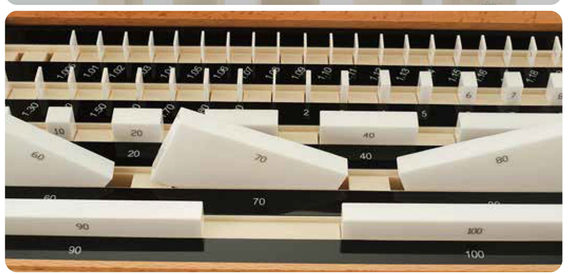

SOLID CARBIDE GAUGE BLOCK SET

- High quality solid carbide which is harder than steel and ceramic
- Strictly made in accordance with DIN ISO 3650
- Made of carbide, extremely wear resistance and corrosion resistance, excellent dimension stability
- Supplied with manufacturer inspection certificate
- Hardness 89.5HRA

DIN ISO 3650

Unit:mm

Code	Grade	Piece/Set	Size	Step	Piece
6341-4232	1	32	1.005	/	1
			1.01-1.09	0.01	9
			1.1-1.9	0.1	9
6340-4232	0		1-9	1	9
			10-30	10	3
			50	/	1
6341-4246	1	46	1.001-1.009	0.001	9
			1.01-1.09	0.01	9
			1.1-1.9	0.1	9
6340-4246	0		1-9	1	9
			10-100	10	10
6341-4247	1	47	1.005	/	1
			1.01-1.19	0.01	19
			1.2-1.9	0.1	8
6340-4247	0		1-9	1	9
			10-100	10	10
6341-4283	1	83	0.5	/	1
			1	/	1
			1.005	/	1
6340-4283	0		1.01-1.49	0.01	49
			1.5-1.9	0.1	5
			2.0-9.5	0.5	16
			10-100	10	10
6341-4287	1	87	1.001-1.009	0.001	9
			1.01-1.49	0.01	49
6340-4287	0		0.5-9.5	0.5	19
			10-100	10	10
6341-4103	1	103	1.005	/	1
			1.01-1.49	0.01	49
6340-4103	0		0.5-24.5	0.5	49
			25-100	25	4
6341-4112	1	112	1.0005	/	1
			1.001-1.009	0.001	9
			1.01-1.49	0.01	49
6340-4112	0		0.5-24.5	0.5	49
			25-100	25	4

PURPOSE

Grade 0: Mainly used in calibration laboratory by specialized inspection staff, as reference standards for calibration of high precision measuring equipment and grade 1 and 2 gauge blocks

Grade 1: Mainly used in laboratory to inspect high precision workpiece, gauge blocks and set measuringequipment

Grade 2: Mainly used in workshop to install cutters and workpiece, inspect the gauge block for manufacturing and set measuring equipment

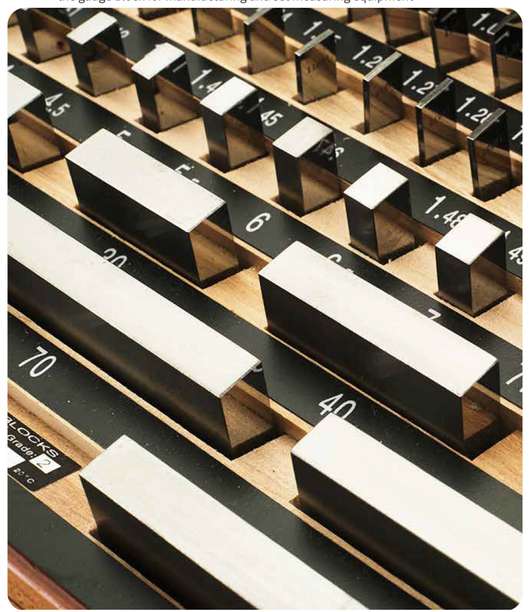

CALIBRATION GAUGE BLOCK SET

DIN ISO 3650

MADE OF HIGH-QUALITY STEEL

- High-carbon, high-chrome steel provides high hardness (⩾63HRC) and wear resistance.
- Strictly made in accordance with DIN ISO 3650.
- made of high-quality alloy steel.
- Edges are slightly lapped for protection.



- Precision ground, mirror polish, heat treatment and cryogenic treatment for all measuring surfaces.



- Stable dimensions with high accuracy, low surface roughness, high wringing force.

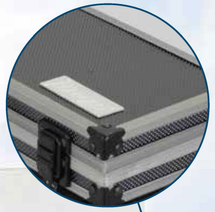

- Provided with fitted Aluminum case



CERTIFICATE

Dasqua

Product name:	Gage blocks	Standard:	DIN ISO 3650	Set No:	6112-1232 (32PCS)
Type:	Rect	Material:	Steel	Grade:	2

Nominal Size (mm)	Run out (μm)	Nominal Size (mm)	Run out (μm)	Nominal Size (mm)	Run out (μm)
1.005	+0.32	1.20	+0.20	4	-0.10
1.01	+0.20	1.30	+0.20	5	-0.17
1.02	+0.30	1.40	+0.20	6	-0.10
1.03	+0.10	1.50	-0.18	7	-0.10
1.04	-0.30	1.60	-0.20	8	+0.20
1.05	-0.03	1.70	-0.12	9	-0.17
1.06	-0.20	1.80	+0.30	10	+0.30
1.07	-0.05	1.90	+0.04	20	+0.08
1.08	-0.10	1	-0.20	30	+0.20
1.09	+0.25	2	+0.20	50	-0.19
1.10	+0.25	3	-0.30		

Remarks: Steandard reference temperature:68°F (20°C)
Coefficient of thermal expansion :(11.5±1.0)×10 $^{-6}$ /°C

Reported by: David

Unit:mm

Code	Grade	Piece/Set	Size	Step	Piece
6110-1232	0	32	1.005	/	1
			1.01-1.09	0.01	9
6111-1232	1		1.1-1.9	0.1	9
			1-9	1	9
6112-1232	2		10-30	10	3
			50	/	1
6110-1246	0	46	1.001-1.009	0.001	9
			1.01-1.09	0.01	9
6111-1246	1		1.1-1.9	0.1	9
			1-9	1	9
6112-1246	2		10-100	10	10
6110-1247	0	47	1.005	/	1
			1.01-1.19	0.01	19
6111-1247	1		1.2-1.9	0.1	8
			1-9	1	9
6112-1247	2		10-100	10	10
6110-1283	0	83	0.5	/	1
			1	/	1
6111-1283	1		1.005	/	1
			1.01-1.49	0.01	49
6112-1283	2		1.5-1.9	0.1	5
			2.0-9.5	0.5	16
			10-100	10	10
6110-1287	0	87	1.001-1.009	0.001	9
6111-1287	1		1.01-1.49	0.01	49
6112-1287	2		0.5-9.5	0.5	19
			10-100	10	10
6110-1201	0	103	1.005	/	1
6111-1201	1		1.01-1.49	0.01	49
6112-1201	2		0.5-24.5	0.5	49
			25-100	25	4
6110-1112	0	112	1.0005	/	1
			1.001-1.009	0.001	9
6111-1112	1		1.01-1.49	0.01	49
			0.5-24.5	0.5	49
6112-1112	2		25-100	25	4
6110-1122	0	122	0.5	/	1
			1	/	1
			1.0005	/	1
6111-1122	1		1.001-1.009	0.001	9
			1.01-1.49	0.01	49
			1.5-1.9	0.1	5
6112-1122	2		2.0-25.0	0.5	47
			30-70	10	5
			75	/	1
			80-100	10	3
6110-3236	0	36	0.05"	/	1
			0.1001"-0.1009"	0.0001"	9
6111-3236	1		0.101"-0.109"	0.001"	9
			0.11"-0.19"	0.01"	9
6112-3236	2		0.1"-0.5"	0.1"	5
			1", 2", 4"	/	3
6110-3281	0	81	0.1001"-0.1009"	0.0001"	9
6111-3281	1		0.101"-0.149"	0.001"	49
			0.05"-0.95"	0.05"	19
6112-3281	2		1"-4"	1"	4

LARGE METRIC GAUGE BLOCK SET

DIN ISO 3650



- Stable dimensions with high accuracy, low surface roughness, high wringing force
- Strictly made in accordance with DIN ISO 3650
- Precision ground, mirror polish, heat treatment and cryogenic treatment for all measuring surfaces
- With inspection certificate
- Made of premium hardened steel
- High-carbon, high-chrome steel provides high hardness (≥63HRC) and wear resistance
- Edges are slightly beveled for protection

8PCS LARGE METRIC GAUGE BLOCK SET

Unit:mm

Code	Size	Grade
6110-3208	125/150/175/200/250/300/400/500	0
6111-3208	125/150/175/200/250/300/400/500	1
6112-3208	125/150/175/200/250/300/400/500	2



5PCS LARGE METRIC GAUGE BLOCK SET

Unit:mm

Code	Size	Grade
6110-3205	600/700/800/900/1000	0
6111-3205	600/700/800/900/1000	1
6112-3205	600/700/800/900/1000	2

GAUGE BLOCK HOLDERS

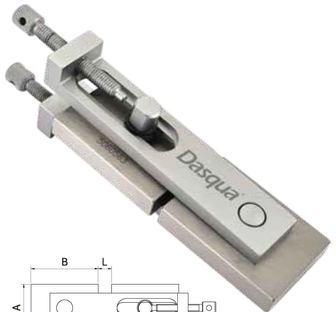

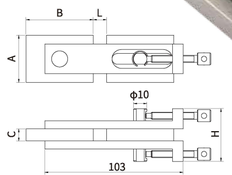

- To be used with gauge blocks for gaging both workpieces and fixtures
- To check, set and adjust gauges and measuring instruments
- Used to couple gauge block together to increase length.
- Holders also can be used with reference points, scribers, and jaw to use as a Go/NoGo (G/NG) gage

Unit:mm

Code	Type	Unit	A	B	C	L	H
6321-0003	3Pcs/Set	Set	35	50	9	0-25	38
6321-0005	5Pcs/Set	Set	35	50	9	0-25	38

GAUGE BALL SET



- Measure difficult close tolerance dimensions in tool rooms inspection departments and production areas
- Ground and lapped
- Made by quality steel hardened
- Chrome steel hardened to Rc 63

Unit:mm

Code	Including	Diamensional accuracy	Shape Accuracy	Quantity
6350-0005	sφ1,sφ2,sφ3,..sφ10….sφ25	0.0025	0.0006	25 pairs

CALIPER AND HEIGHT GAUGE CHECKER



- Used to set and inspect caliper and height gauges
- Ceramic gage blocks can be used in either vertical and horizontal orientation
- Measuring blocks are corrosion-resistant and dimensionally stable
- Supplied with inspection certificate

Unit:mm

Code	Range	Internal Measuring Hand Size	Accuracy
6451-0005	0-300	20/50/100/150/200/250/300/330	±0.005
6451-0010	0-600	20/50/100/150/200/250/300/350/400/450/500/550/600	±0.007
6451-0015	0-1000	20/50/100/150/200/250/300/350/400/450/500/550/600 /650/700/750/800/850/900/950/1000	±0.007

PIN GAUGE SET

- Strictly made in accordance with DIN2269
- Perfect for measuring the hole diameter, distance between holes, hole location, slot width, used as go&no-go gagues or as reference standards of setting measuring equipment
- Made of hardened steel, heat treatment, abrasion resistant, hardness 60-63HRC, precision ground for long service life





Unit:mm

Code	Amount(Pcs)	Size	Step	Accuary
6211-4205	91	1-10	0.1	±0.001
6211-4210	273	Include 273pcs(0.99/1.00/1.01[3pcs];1.09/1.10/1.11, 1.19/1.20/1.21…1.89/1.90/1.91,1.99/2.00/2.01[30pcs] 2.09/2.10/2.11…9.99/10.00/10.01[240pcs])		±0.001
6212-4205	190	0.061"-0.250"	0.001"	-0.0002"
6212-4210	250	0.251"-0.5000"	0.001"	-0.0002"

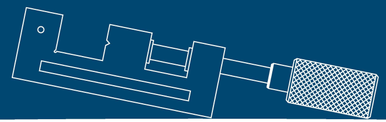

TOOL SETTING MEASURING GAUGES

BORN IN ITALY, RAISED BY THE WORLD

EDGE FINDER



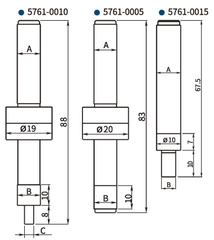

- Body and contact are made of tool steel, hardened and ground and lapped to close tolerances for diameter and concentricity
- For adjusting basic surfaces or edges
- Ideal for locating work surfaces easily, quickly and accurately
- Useful for identifying center line on jig boring, milling and engraving machines
- Rotational speed of spindle approx 400 - 600 rpm

Unit:mm

Code	Shank Diameter(A)	Contact Point(B&C)	Accuracy
5761-0005	φ10	φ10	0.005
5761-0010	φ10	φ10&φ4	0.005
5761-0015	φ10	φ6	0.008

ELECTRIC EDGE FINDER



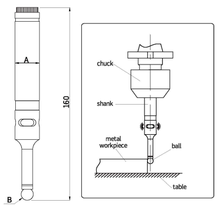

- Edge finder lights and beeps instantly when probe touches workpiece
- High sensitivity probe for accurate positioning relative to workpiece
- Read off any electrically conductive metal
- Used to precisely determine the edge of a workpiece (zero setting)
- Hardened shank and contact ball

Unit:mm

Code	Shank(A)	Contact ball(B)	Beeper	Accuracy
5760-1005	φ20	Sφ10	with	0.005

CENTERING INDICATOR GAUGE

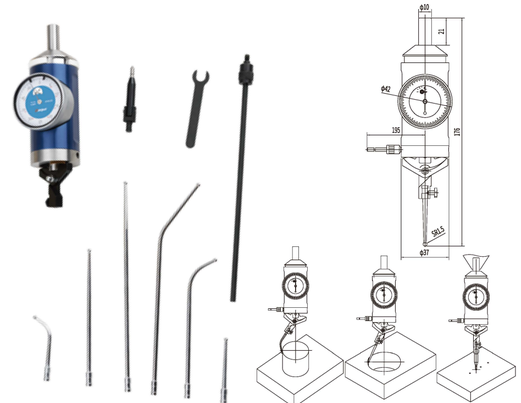

- Use this indicator to quickly center work pieces or fixtures on your bore and milling set-ups
- Determining the centres of bores and shafts
- Sturdy metal housing suitable for workshop
- Internal or external centering
- Operates at any angle from vertical to horizontal without a change
- 3 internal and 3 external feelers restraining arm
- Center point feeler
- The shank is 10mm diameter and 20 mm long
- The indicator is 180mm long with 45 mm straight feeler
- Internal diameter is from 4mm to 300 mm
- External diameter is from 0mm to 300 mm
- Straight feeler length:45 mm /100mm/154 mm
- Curved feeler length:46 mm /100 mm /154 mm
- Center point feeler length:52.5 mm

Unit:mm

Code	Range	Graduation	Accuracy
5711-6100	0-0.15"	0.0005"	0.001"
5712-1100	0-3	0.01	0.02

ZERO SETTING DEVICE



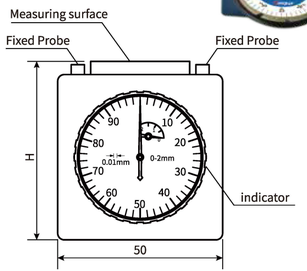

- With magnetic base
- To adjust the tools to the 0-position to determine the reference point of the machine spindle
- No feeler gauge or starting contact is needed
- Spring loaded setting face
- Mechanical zero-setting instrument for CNC machine centers
- Low spring force to prevent cutting tool from damage

Unit:mm

Code	Range	Graduation	Height	Remark
1122-9001	0-2	0.01	50	Magnetic base
1122-9002	0-2	0.01	100	Magnetic base with switch

DIGITAL ZERO SETTING DEVICE

WITH 0.001MM RESOLUTION

IP65

- Accuracy（toleranace range): ±0.002mm/0.0001",
  Repeatability:0.003mm/0.0001"
- 3V Lithium battery CR2032

Used to help tool setting
Can be used in IP65 working environment (with inductive measurement against splash water) and will not damage the tool edge

Resolution reaches 0.001mm
Higher than other zero setting devices

Lighting indicating at "0"
More obvious and accurate compared with mechanic zero setting device

Unit: mm

Code	Height	Resolution
1801-1005	50	0.001/0.00005"
1801-1010	100	0.001/0.00005"



Provided in fitted aluminum case

Height of 100mm optional

With magnetic base
Fixed on machine steadily and shorten tool setting time and improve work efficiency greatly

PREMIUM MAGNETIC PARALLEL SET

WITH HANDLE

Patented design for easy installation and disassemble



BEFORE USE



IN USE

- Higher Accuracy from Dasqua
- Height tolerence:±0.005mm Width tolerence:0.01mm
- Hardness：55-60HRC

Unit:mm

Code	Amtount(Pairs)	Length	Width	Thickness
1801-0105-A	5	100	15,22,25,30,32	2.5
1801-0110-A	5	125	15,30,35,37,39	2.5
1801-0115-A	5	150	25,35,40,45,47	2.5







Newly designed embeded magnets
leaving your hands for clamping and setting up reduce the clamping time significantly

1-2-3 BLOCKS







- Product Dimensions: 1" x 2" x 3"
- Heat treated and case hardened to HRC 58-62
- Hardened and precision Ground on all 6 sides of each block
- 23 holes consists of 5 tapped holes that are 3/8-16 for clamping and 18 untapped holes
- tolerance of size ±0.0002",Parallelism 0.0002",Height of pair 0.0002"
- Cross drilling design gives minimum weight and maximum strength

Unit:mm

Code	Size	Squareness
8407-0005	1"-2"-3"	0.0001"/1"
8407-0010	1"-2"-3"	0.0003"/1"

EXTRA THIN PREMIUM PARALLEL SET



- Come with 10 Pairs Precision Ultra Thin Parallel Set
- Made of premium alloy steel, hardened, stress-relieved, precision ground, used in pairs
- With high perpendicularity, parallelism, dimension accuracy, convenient to use and maintain
- Easy to operate during the drilling, milling, assembling work, convenient to clamp workpiece, and provide the reliable and accurate position for workpiece
- Accuracy: Height±0.01mm, thickness±0.01mm, use in pairs: ±0.01mm (height/thickness)
- Edges are slightly beveled
- Superior surface finish: Ra0.4um, high hardness: 56-61HRC, long service life

Unit:mm

Code	Amount(Pairs)	Thickness x Length	Height
8201-0005	10	0.8 x 150	12,14,16,18,20,22,24,26,28,30
8202-0005	10	1/32" x 6"	1/2",5/8",3/4",7/8",1",1-1/8",1-1/4",1-3/8",1-1/2"&1-5/8"

PREMIUM PARALLEL SET

WITH ALU.CASE

- Premium alloy steel, hardened and quenched, hardness of 58-63HRC, long service life
- Edges are slightly lapped for anti-collision.
- Fitted black aluminium case

CERTIFICATE Dasqua

Product name :	Parallel Set	Size:Wide x Height x Length		
Type:	4 Pairs	4.76 x 31.75 x 152.4mm		
Material :	20CrMnTi	4.76x 44.45 x 152.4mm		
Hardness:	60HRC	4.76 x 38.1 x 152.4mm		
		4.76 x 25.4 x 152.4mm		
Conclusion: Passed		Height Tolerance:	- 0.01mm	Width Tolerance: 0.008mm
		Parallelism:	0.005mm	Paired in Height 0.007mm
Inspector : Dasqua		Roughness of Working Surface:	Ra0.4	
		Roughness of Non-Working Surface:	Ra0.4	

Unit:mm

Code	Quantity(Pairs)	Thickness x Length	Height
8203-0010	14	10 x 150	14,16,18,20,22,24,26,28,30,32,35,40,45,50
8203-0025	14	4 x 150	14,16,18,20,22,24,26,28,30,32,35,40,45,50
8203-0030	9	8.5 x 150	14,16,20,24,30,32,36,40,44
8204-0010	9	1/4"x6"	3/4",7/8",1",1-1/8",1-1/4",1-3/8",1-1/2",1-5/8",1-3/4"
8204-0015	10	1/8"x6"	1/2",5/8",3/4",7/8",1",1-1/8",1-1/4",1-3/8",1-1/2",1-5/8"
8204-0025	4	3/16"x6"	1",1-1/4",1-1/2",1-3/4"

- Precision ground with high accuracy: height/width ±0.01mm, parallelism ±0.005mm, use in pairs: ±0.01mm (height/thickness) and each parallel set is provided with its own inspection report

- Round chamfer to protect operators' hands from scratch

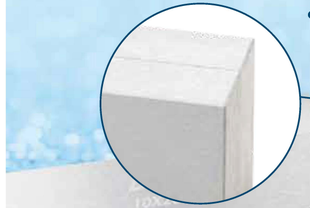

LONG HIGH SERVICE LIFE HARDNESS

PRECISION TOOLMAKERS VICE-SCREW GUIDE TYPE

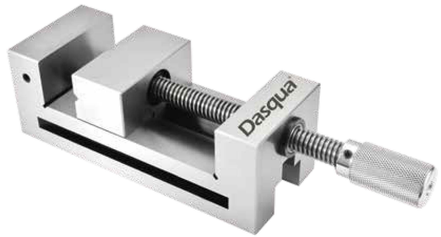

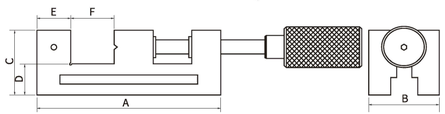

- Hardened and stabilized
- Precision ground to a mirror finish
- Squareness of the vice is within 0.005mm and parallelism of the vice is within 0.003mmon all critical sidest
- Horizontal and Vertical V moveable jaws are provided for holding the round/square partst
- Jaw pressure on workpiece is forward and downward for repeatable positioning and maximum holding powert
- Particularly suitable for erosion work
- Can be used on base, either side, end and top

Unit:mm

Code	A	B	C	D	E	F	Weight
8802-5105	156	50	52	27	25	0-63	2.3kg
8802-5110	176	63	63	33	30	0-73	4.0kg
8802-5115	190	73	73	38	35	0-76	5.5kg
8802-5120	255	100	82	42	40	0-120	11.0kg

PRECISION TOOLMAKERS VICE

QUICK ACTION TYPE

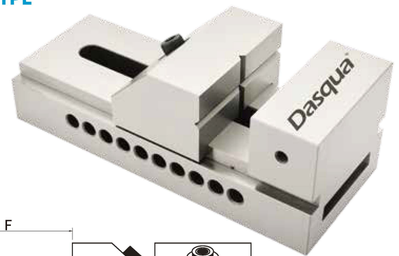

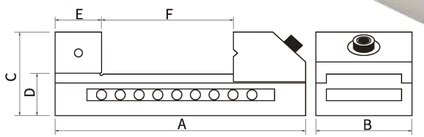

- Hardened and stabilized.
- Precision ground to a mirror finish
- Squareness of the vice is within 0.005mm and parallelism of the vice is within 0.003mmon all critical sidest
- Positive download and rapid positioning notches for free Jaw movement
- Horizontal and Vertical V moveable jaws are provided for holding the round/square parts
- Locking Screw provided at the Vise base for adjustable positions of the moveable Jaw
- The rapid positioning notches allow the vice to be locked in any position by means of an allen key provided with the vice
- Jaw pressure on work piece is forward and downward for repeatable positioning and maximum holding power
- Particularly suitable for erosion work
- Can be used on base, either side, end and top

Unit:mm

Code	A	B	C	D	E	F	Weight
8802-1105	150	50	53	28	30	0-80	1.6kg
8802-1110	175	63	63	31	35	0-90	2.9kg
8802-1115	190	73	70	35	35	0-100	4.3kg
8802-1120	245	100	90	45	45	0-130	10kg

GRANITE V-BLOCK SET



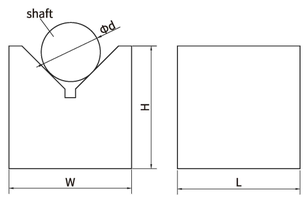

- Ideal for testing cylinder
- Made of granite, hard and no rusty, no dimensional change over time or temperature change
- With V-cut 90°, finely ground
- Side- and front-faces angular ground in regard to base area
- Supplied in matched pair

Unit:mm

Code	L x W x H	Range of shafts(φd)	Parallelism of V groove to bottom	Height difference of a matched pair	Grade
8321-1005	70x50x70	5-45	0.003	0.003	00
8321-1010	100x50x70	5-45	0.004	0.003	00

V-BLOCK & CLAMP SET



- Made of premium hardened steel, stress-relieved and precision ground in pairs
- Flatness and parallelism±0.01mm
- V-angle 90°clamping brackets can be used to check cylindrical precision machined parts
- Contact faces are ground and lapped

Unit:mm

Code	Clamping Range	H	W	L
8101-0005	6-30	36	40	45
8101-0010	6-32	40	45	70
8101-2005	1"	1-3/8"	1-3/4"	1-5/8"
8101-2010	1-1/2"	1-5/8"	1-3/4"	2-3/4"
8101-2015	1-1/2"	1-3/4"	2-1/2"	2-3/4"
8101-2020	2-1/8"	2-3/4"	3-1/2"	4-7/8"

MAGNETIC INDUCTION V-BLOCK



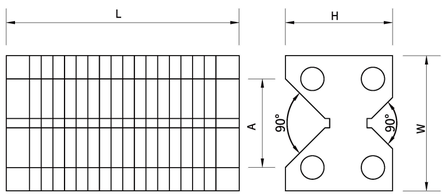

- All working surfaces are hardened, precision ground
- For use on magnetic chucks
- These fine V-Blocks are now made universal holds in any direction on the magnetic chuck
- Integrally aluminum cast into one solid piece ground all over and series numbered in pairs

Unit:mm

Code	L x W x H	A	Meterial	Weight
8561-2020	100x58x46	38	Steel/Aluminum	1.2kg
8561-2025	50x58x46(2pcs)	38	Steel/Aluminum	0.6kgx2

MAGNETIC V-BLOCK

● 8561-2005/8561-2010



● 8561-2015



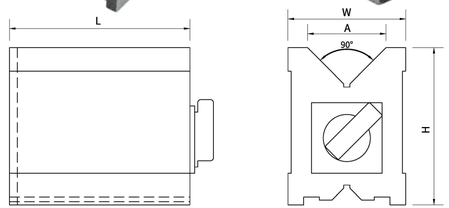

- Magnetic Measuring and Clamping V-Block
- Hardened, high accuracy, strong magnetic force for grinding, light milling, drilling and inspection of round and square jobs
- All working surfaces are hardened
- Magnetic force on top, bottom and two V grooves
- V groove on the top for large shafts V groove on the bottom for small shafts
- Suitable for cast iron surface plates
- Magnet has an On/Off switch which easily and quickly engages / releases magnet

Unit:mm

Code	Holding power	L	W	H	A	Weight
8561-2005	70kg	100	70	95	46	4.0kg
8561-2010	80kg	115	75	100	50	5.2kg
8561-2015	60kg	70	60	72	36	1.6kg

MAGNETIC V-BLOCK SET



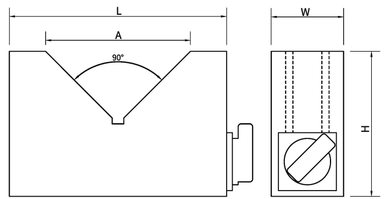

- Made of high quality steel and copper
- Magnet has an On/Off switch which easily and quickly engages / releases magnet
- Precision ground and lapped in pairs to ensure same size
- Both V-grooved part and bottom face have magnetic force

Unit:mm

Code	Holding power	L x W x H	A	Applicable Dia	weight
8561-2030	15kg	70X40X50(2pcs)	34	φ50	1kgx2
8561-2035	23kg	150X50X100(2pcs)	100	φ100	5kgx2

GRANITE SQUARE 90°



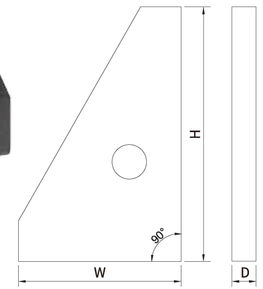

- Used to check squareness
- Holes are made to reduce weight so easy to handle and carry
- Made of natural granite, with two sides precision ground

Unit:mm

Code	Size(H x W x D)	Squareness between meaning surface and datumsurface	Grade
9211-3005	250x160x40	0.002	00
9211-3010	400x250x50	0.003	00
9211-3015	630x400x50	0.004	00

GRANITE SURFACE PLATE



- Meet DIN876, grade 00 is for inspection room or lab, grade 0 is for workshop
- Made of granite, free from deterioration or dimensional change over time, minimal changes in dimension due to temperature changes
- High density structure thus extremely homogeneous
- Surface plate is lapped and has a satin matt finish to prevent glare
- 100% corrosion proof
- Non-magnetic and non-conductive
- Measuring insruments and test equipment are easy to slide over surface
- For measuring tasks, layout work, touching up and lapping precision parts
- Optional accessory: stand for granite surface plate, jack for granite surface plate
- Supplied with calibration certificate

Unit:mm

Code	L x W x H	Flatness (Grade 00)	Code	L x W x H	Flatness (Grade 0)
8500-3020	300x200x60	0.0027	**8730-3020**	300x200x60	0.0054
8500-4025	400x250x60	0.0029	**8730-4025**	400x250x60	0.0059
8500-4040	400x400x60	0.0031	**8730-4040**	400x400x60	0.0063
8500-5032	500x315x70	0.0032	**8730-5032**	500x315x70	0.0064
8500-6340	630x400x80	0.0035	**8730-6340**	630x400x80	0.0070
8500-6363	630x630x100	0.0038	**8730-6363**	630x630x100	0.0076
8500-8050	800x500x100	0.0039	**8730-8050**	800x500x100	0.0078
8500-1063	1000x630x140	0.0044	**8730-1063**	1000x630x140	0.0087

GRANITE PLATE STAND



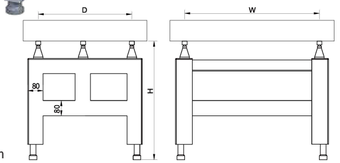

- Solid steel construction
- For medium size granite surface plates
- Adjusting range of jacks
- One foot on the bottom is adjustable

Unit:mm

Code	For granite surface plate	W x D x H
8295-0005	630x400x80 (code 8500-6340,8730-6340)	350x222x(700-725)
8295-0010	630x630x100 (code 8500-6363,8730-6363)	350x350x(680-705)
8295-0015	800x500x100 (code 8500-8050,8730-8050)	444x277x(680-705)
8295-0020	1000x630x140 (code 8500-1063,8730-1063)	555x350x(620-645)
8295-1005	630x400x80 (code 8500-6340,8730-6340)	350x222x(930-955)
8295-1010	630x630x100 (code 8500-6363,8730-6363)	350x350x(910-935)
8295-1015	800x500x100 (code 8500-8050,8730-8050)	444x277x(910-935)
8295-1020	1000x630x140 (code 8500-1063,8730-1063)	555x350x(870-895)

COMPARATIVE MEASURING GAUGES

BORN IN ITALY, RAISED BY THE WORLD

FEELER GAUGE SHIM ROLL BLUE TIN



Unit:mm

Code	Size
1803-3110	0.01*50*5000
1803-3111	0.02*50*5000
1803-3112	0.03*50*5000
1803-3113	0.04*50*5000
1803-3114	0.05*50*5000
1803-3115	0.06*50*5000
1803-3116	0.07*50*5000
1803-3117	0.08*50*5000
1803-3118	0.09*50*5000
1803-3119	0.10*50*5000





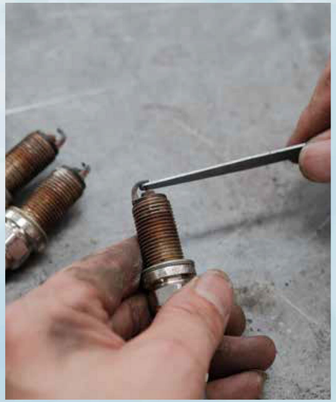

FEELER GAUGE SHIM ROLL

DIN 2275

Made in Europe

- Made in Europe and strictly in accordance with DIN2275
- Surface roughness: Ra 0.4μm
- Hardness: 360-600HV and prolongs the service life significantly
- Material: premium stainless steel/alloy steel
- Thickness: 0.01, 0.02, 0.03, 0.04, 0.05, 0.06, 0.07, 0.08, 0.09, 0.10, 0.15, 0.20, 0.25,0.30,0.35,0.40,0.45,0.50,0.55,0.60,0.65,0.70,0.80,0.90,1.00mm
- Shaped size: 12.7mmx5m, desired length can be cut. Other sizes can be ordered separately



Unit:mm

Code	Thickness	Remark	Code	Thickness	Remark
1803-2110	0.01	Stainless Steel	1803-4122	0.25	65Mn
1803-4111	0.02	65Mn	1803-4123	0.30	65Mn
1803-4112	0.03	65Mn	1803-4124	0.35	65Mn
1803-4113	0.04	65Mn	1803-4125	0.40	65Mn
1803-4114	0.05	65Mn	1803-4126	0.45	65Mn
1803-4115	0.06	65Mn	1803-4127	0.50	65Mn
1803-4116	0.07	65Mn	1803-4128	0.60	65Mn
1803-4117	0.08	65Mn	1803-4129	0.70	65Mn
1803-4118	0.09	65Mn	1803-4130	0.80	65Mn
1803-4119	0.10	65Mn	1803-4131	0.90	65Mn
1803-4120	0.15	65Mn	1803-4132	1.00	65Mn
1803-4121	0.20	65Mn			



Unit:mm

Code	Thickness	Remark
1803-0105	0.01,0.02,0.03,0.04,0.05,0.06,0.07,0.08,0.09,0.10,0.15,0.20,0.25	Set

FEELER GAUGE

- Suitable for electronic equipment, mold manufacturing, automotive, automation equipment, precision machinery, metal parts, machinery parts and so on
- Strictly made in accordance with DIN2275
- High tolerance accuracy for precise measurements
- Hardened spring steel, conical shaped blades,
- Nickel plated case with lock nut
- The numbers of size are etched into feeler gauge for easy identification
- Polished surface, durable and smooth

DIN 2275



Unit:mm

Code	Length	Range	Amount(Pcs)	Including
1825-0175	75	0.04-1.00	25	0.04,0.05,0.06,0.07,0.08,0.09,0.10,0.15,0.20,0.25,0.30,0.35, 0.40,0.45,0.50,0.55,0.60,0.65,0.70,0.75,0.80,0.85,0.90,0.95,1.00
1813-0100	100	0.05-1.00	13	0.05,0.10,0.15,0.20,0.25,0.30,0.40,0.50,0.60,0.70,0.80,0.90,1.00
1813-1100	100	0.03-0.5	13	0.03,0.04,0.05,0.06,0.07,0.08,0.09,0.10,0.15,0.20,0.30,0.40,0.50
1817-0100	100	0.02-1.00	17	0.02,0.03,0.04,0.05,0.06,0.07,0.08,0.09,0.10, 0.15,0.20,0.25,0.30,0.40,0.50,0.75,1.00
1820-0100	100	0.05-1.00	20	0.05,0.10,0.15,0.20,0.25,0.30,0.35,0.40,0.45,0.50, 0.55,0.60,0.65,0.70,0.75,0.80,0.85,0.90,0.95,1.00
1828-0100	100	0.05-1.00	28	0.05,0.06,0.07,0.08,0.09,0.10,0.11,0.12,0.13,0.14,0.15,0.20,0.25, 0.30,0.35,0.40,0.45,0.50,0.55,0.60,0.65,0.70,0.75,0.80,0.85,0.90, 0.95,1.00
1832-0100	100	0.03-1.00	32	0.03,0.04,0.05,0.06,0.07,0.08,0.09,0.10,0.13,0.15,0.18,0.20,0.23, 0.25,0.28,0.30,0.33,0.35,0.38,0.40,0.45,0.50,0.55,0.60,0.63,0.65, 0.70,0.75,0.80,0.85,0.90,1.00
1813-0150	150	0.05-1.00	13	0.05,0.10,0.15,0.20,0.25,0.30,0.40,0.50,0.60,0.70,0.80,0.90,1.00
1820-0150	150	0.05-1.00	20	0.05,0.10,0.15,0.20,0.25,0.30,0.35,0.40,0.45,0.50, 0.55,0.60,0.65,0.70,0.75,0.80,0.85,0.90,0.95,1.00
1813-0200	200	0.05-1.00	13	0.05,0.10,0.15,0.20,0.25,0.30,0.40,0.50,0.60,0.70,0.80,0.90,1.00
1820-0200	200	0.05-1.00	20	0.05,0.10,0.15,0.20,0.25,0.30,0.35,0.40,0.45,0.50, 0.55,0.60,0.65,0.70,0.75,0.80,0.85,0.90,0.95,1.00
1813-0300	300	0.05-1.00	13	0.05,0.10,0.15,0.20,0.25,0.30,0.40,0.50,0.60,0.70,0.80,0.90,1.00
1820-0300	300	0.05-1.00	20	0.05,0.10,0.15,0.20,0.25,0.30,0.35,0.40,0.45,0.50, 0.55,0.60,0.65,0.70,0.75,0.80,0.85,0.90,0.95,1.00
1732-0035	90/3.5"	0.0015"-0.035"	32	0.04/0.0015'',0.05/0.002'',0.06/0.0025'',0.08/0.003'',0.10/0.004'', 0.13/0.005'',0.15/0.006'',0.18/0.007'',0.20/0.008'',0.23/0.009'', 0.25/0.01'',0.28/0.011'',0.30/0.012'',0.33/0.013'',0.35/0.014'', 0.38/0.015'',0.40/0.016'',0.43/0.017'',0.45/0.018'',0.48/0.019'', 0.50/0.02'',0.53/0.021'',0.55/0.022'',0.58/0.023'',0.60/0.024'', 0.63/0.025'',0.65/0.026'',0.70/0.028'',0.75/0.03'',0.80/0.032'', 0.88/0.035'' Plus（1pc of Copper） 0.25/0.01''

BRASS FEELER GAUGE

- Made from brass, suitable for non-magnetic application,e.g. checking the electrode distance in spark plugs, or for setting sensors at ABS
- Conical shaped blades
- With lock nut
- Sizes in mm on each blade



Unit:mm

Code	Length	Range	Amount(Pcs)	Including
1620-0101	100	0.05-1.00	13	0.05,0.10,0.15,0.20,0.25,0.30,0.40,0.50, 0.60,0.70,0.80,0.90,1.00
1620-0100	100	0.05-1.00	20	0.05,0.10,0.15,0.20,0.25,0.30,0.35,0.40,0.45,0.50, 0.55,0.60,0.65,0.70,0.75,0.80,0.85,0.90,0.95,1.00

METRIC/INCH SCREW PITCH GAUGE SET

- Used to check the pitch of screw thread
- Narrow designed blades can be used for internal and external screw threads
- Locking device at each end to secure all blades for storage or positioning
- Correct pitch is determined by matching blade teeth with threads
- Precisely ground and finished
- Blades marked with thread size
- Made of premium stainless steel

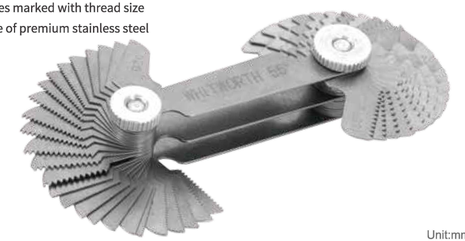

Unit:mm

Code	Thread type	Amount(Pcs)	Range	Including
1501-1024	Metric 60°	24	0.25-7.00	0.25,0.30,0.35,0.40,0.50,0.70,0.75,0.80,0.90,1.00,1.25,1.50, 1.75,2.00,2.50,3.00,3.50,4.00,4.50,5.00,5.50,6.00,6.50,7.00
1501-1020	Metric 60°	20	0.4-6.00	0.40,0.50,0.60,0.70,0.75,0.80,0.9,1.00,1.25,1.50, 1.75,2.00,2.50,3.00,3.50,4.00,4.50,5.00,5.50,6.00
1502-2030	Whitworth 55°	30	4-42TPI	4,4-1/2,5,5-1/2,6,7,8,9,10,11,12,13,14,15,16,18,19,20,22, 24,26,27,28,30,32,34,36,38,40,42TPI
1503-3030	Unified 60°	30	4-42TPI	4,4-1/2,5,5-1/2,6,7,8,9,10,11,11-1/2,12,13,14,15,16,18,20, 22,24,26,27,28,30,32,34,36,38,40,42TPI
1500-0052	Metric 60°	24	0.25-6.00	0.25,0.3,0.35,0.4,0.45,0.5,0.6,0.7,0.75,0.8,0.9,1,1.25,1.5, 1.75,2,2.5,3,3.5,4,4.5,5,5.5,6
	Whitworth 55°	28	4-62TPI	4,4-1/2,5,6,7,8,9,10,11,12,13,14,16,18,19,20,22,24,25,26, 28,30,32,36,40,48,60,62TPI
1500-1052	Metric 60°	22	0.4-7.00	0.4,0.5,0.6,0.7,0.75,0.8,0.9,1,1.25,1.5,1.75,2,2.5,3,3.5,4, 4.5,5,5.5,6,6.5,7
	Unified 60°	30	4-42TPI	4,4-1/2,5,5-1/2,6,7,8,9,10,11,11-1/2,12,13,14,15,16,18,20, 22,24,26,27,28,30,32,34,36,38,40,42TPI

ANGLE GAUGE

- Fine machined edges
- Made of hardened stainless steel
- The blade ends are beveled at various angles



Code	Range	Amount(Pcs)	Including	Accuracy
1420-1025	1°-45°	20	1 ° / 2 ° / 3 ° / 4 ° / 5 ° / 6 ° / 7 ° / 8 ° / 9 ° / 10 ° / 12 ° / 14 ° / 16 ° / 18 ° / 20 ° / 25 ° / 30 ° / 35 ° / 40 ° / 45 °	±30'

UNIVERSAL CUTTER POINT ANGLE GAUGE

- Easy to measure the angles of top point of drills and countersinks
- Made of premium polished stainless steel
- Thickness: 1.0mm, size: 80x80mm

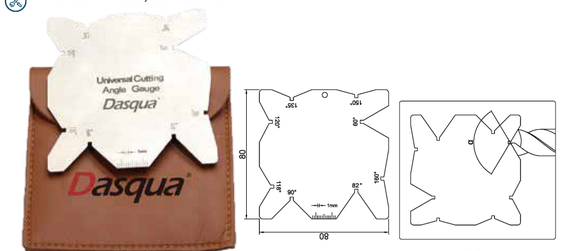

Unit:mm

Code	Thickness	Size	Graduation	Accuracy
8511-0005	1.0	80x80	60°/82°/90°/118°/120°/135°/150°/160°	±0.5°

DRILL GRINDING GAUGE

- Made of premium polished stainless steel
- Used for twist drills with cone angle 118°
- Used to check if the center of tip is concentric with the drill body
- Hardened, precision ground and lapped

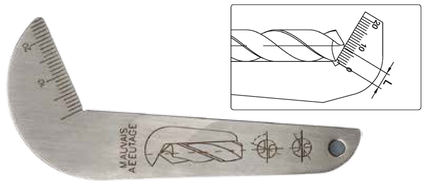

Code	Range	Accuracy	
		Angle	Length
8511-0010	tip angle 118°,up to Φ50mm	±0.5°	±0.5

18PCS ANGLE GAGE SET

- Angles 5° - 90 °
- Stainless steel material
- Each gage checks primary,1/ 2 primary and complimentary angles
- Quick and accurate inspection of angle and I.D or O.D chamfers in or out of the machine

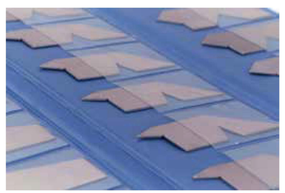

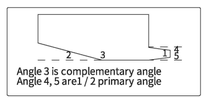

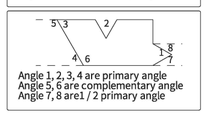

Code	Amount(Pcs)	Primary angle	1/2 Primary angle	Complementary angle
1320-0005	18	5-90°,step:5°	2.5-45°	175-90°,step:5°

RADIUS GAUGE

- For testing of raised and recessed curves
- Fine cutted forms
- Both concave and convex shaped blades become a pair
- Radius size is marked on each gauge
- With a locking clamp



Unit:mm

Code	Range	Step	Leaves	
			Convex(Pcs)	Concave(Pcs)
1351-0005	1.0-7.0	1.0-3.0:0.25;3.0-7.0:0.5	17	17
1351-0010	7.5-15	7.5-15:0.5	16	16
1351-0015	15.5-25	15.5-20:0.5;20-25:1	15	15
1352-1005	1/32"-1/4"	1/64"	15	15
1352-1010	17/64"-1/2"	1/64"	16	16
1352-1015	17/32"-1"	1/32"	16	16

ACME SCREW THREAD GAUGE

- Used as the standard blocks when grinding acme threads
- Acme thread inclination: 14-1/2 degree (29 degree inclined angle)
- Angles and edges are hardened and precision ground
- Threads: 1, 1-1/3, 1-1/2, 1-3/4, 2, 2-1/2, 3, 4, 5, 6, 7, 8, 9&10TPI



Code	Range	Thread type	Pitch
1041-0005	1-10TPI	ACME29°	1, 1-1/3, 1-1/2, 1-3/4, 2, 2-1/2, 3, 4, 5, 6, 7, 8, 9&10TPI

ANGLE THREAD CUTTING GAUGE

- For checking and set screw cutting tools, and check the angle and pitch of screw thread Angle
- Angles 55° whitworth or 60° metric
- Accuracy: ±30min
- Made of stainless steel



Unit:mm

Code	Thread type	Angle	Graduation
1041-2205	Metric 60°	60°	0.5,1
1041-2210	Unified 60°	60°	14ths and 20ths on front side,24ths and 32ths on back side
1041-2215	Whitworth 55°	55°	14ths and 20ths on front side,24ths and 32ths on back side

THREAD CUTTING GAUGE

- Used to detect the angle and width of the thread cutting tool and set the position of the thread cutting tool
- For grinding & setting tools when cutting Acme threads
- Fine machined edges
- Made of hardened stainless steel, wear resistance, long service life
- Used for woodworking, metalworking, machine, equipment and many other industries
- Laser etched graduations, satin chrome finish



Code	Range	Thread type	Pitch
1041-0007	2-12	Tr30°	2,3,4,5,6,7,8,9,10,12

ACME THREAD CUTTING GAUGE

- For grinding & setting tools when cutting Acme threads
- SAE 60° / Ww-BSF 55° / 14.5° ACME / 47.5° BA
- Stainless steel with satin chrome finish
- Laser etched graduations



Code	Thickness	Thread type
1041-0006	1	60°American&Metric/55°Whit&B.S.F/47-1/2°BA/14-1/2°Acme

WIRE & SHEET METAL GAUGE

AMERICAN STANDARD

- Gage numbers are in American standard numbers 0-36
- Heavy duty gage, hardened stainless steel
- Satin finish for easy reading
- Decimal equivalents on the reverse side
- Diameter-3-1/4"(φ83mm)
- Used to gauge wire, sheet, plate and non-ferrous metals such as copper, aluminum and brass



● 1041-0020



● 1041-0025

Code	Graduation	Diameter
1041-0020	0-36(0.3125"-0.007")	3-1/4"(φ83mm)
1041-0025	0-36(0.325"-0.005")	3-1/4"(φ83mm)

TAPER GAUGE

- Made of polished stainless steel
- Used to measure inside diameter of tubing, hole size, slot width
- Satin chrome finish for easy and accurate readings
- Graduated to measure inside diameters or widths from metric size 1mm-60mm by 0.1mm and inch size 1/16"-2-3/8" in 1/64" another side



Unit:mm

Code	Range	Graduation
8522-0005	1/16"-5/8"	1/64"
8521-0005	1-15; 1/16"-5/8"	0.1 & 1/64"
8522-0010	5/8"-1-3/16"	1/64"
8521-0010	15-30; 5/8"-1-3/16"	0.1 & 1/64"
8522-0015	1-3/16"-1-3/4"	1/64"
8521-0015	30-45; 1-3/16"-1-3/4"	0.1 & 1/64"
8522-0020	1-3/4"-2-3/8"	1/64"
8521-0020	45-60; 1-3/4"-2-3/8"	0.1 & 1/64"

TAPER BORE GAUGE



Made in Europe



● 1051-2010
Length about 11.8cm with 0.1-3mm measuring range of bore diameter

- Used to measure grooves and gaps or places where hard to rach
- Made of excellent stainless steel
- With a cap to protect the tip



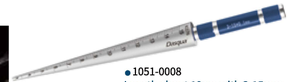

● 1051-0008
Length about 19cm with 3-15mm measuring range of bore diameter





● 1051-3005
Length about 16cm with 0.4-6mm measuring range of bore diameter

CIRCULAR TAPER GAUGE

Unit:mm

Code	Range	Graduation
1051-2005	0.1-3	0.1
1051-2010	0.1-5	0.1

TAPER GAUGE

Unit:mm

Code	Range	Graduation	Accuracy
1051-0005	1-6.5	0.1	±0.05
1051-0008	3-15	0.1	±0.05
1051-0015	3-16	0.1	±0.05
1051-0020	15-30	0.1	±0.05
1051-0025	30-45	0.1	±0.05

CLEARANCE GAUGE

Unit:mm

Code	Range	Graduation
1051-3005	0.4-6	0.05
1051-3010	0.5-10	0.05
1051-3015	1-15	0.1

CIRCUMFERENCE GAUGE

- Application areas include the pipelines, boiler and tank construction, tire industry, forestry, etc
- For measuring diameters and circumferences of all circular objects quickly and easily
- With laser etched scales
- Graduation in mm or inch available
- Made of stainless steel material

Made in Europe

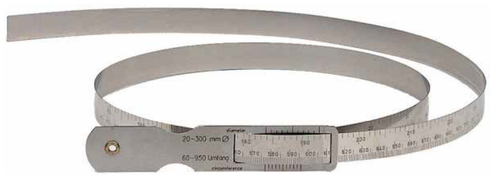

Unit:mm

Code	Circumference Range	Graduation	Diameter Range
1704-0005-A	60-950	0.1	φ20-φ300
1704-0010-A	940-2200	0.1	φ300-φ700
1704-0015-A	2190-3460	0.1	φ700-φ1100
1704-0020-A	3450-4720	0.1	φ1100-φ1500
1704-0025-A	4710-5980	0.1	φ1500-φ1900
1704-0030-A	5960-7230	0.1	φ1900-φ2300
1704-0035-A	7220-8500	0.1	φ2300-φ2700
1704-0040-A	8480-9760	0.1	φ2700-φ3100
1704-0045-A	9730-11010	0.1	φ3100-φ3500

TELESCOPING GAUGE SET

- The spring-loaded plunger expands within the bore, or groove, slots and holes, allowing determination of the internal diameter or groove width
- Each gage has a knurled clamp
- Satin chrome finish
- Contact plunger automatically self-centering at all times and in all positions
- Constant spring force on the measuring surface



Unit:mm

Code	Range	length
5911-0001	8-12.7,12.7-19,19-32,32-54,54-90,90-150 5/16"-1/2",1/2"-3/4",3/4"-1-1/4",1-1/4"-2-1/8",2-1/8"-3-1/2",3-1/2"-6"	Up to 300/ 12"
5911-0002	8-12.7,12.7-19,19-32,32-54,54-90,90-150 5/16"-1/2",1/2"-3/4",3/4"-1-1/4",1-1/4"-2-1/8",2-1/8"-3-1/2",3-1/2"-6"	Up to 150/ 6"

SMALL HOLE GAUGE SET

- Measuring range: 3-5 mm, 5-7,5 mm, 7,5-10 mm, 10-13 mm
- Used with an outside micrometer for measuring inside diameter of bores
- Gaging surface is fully hardened to ensure long tool life
- Extra long for gaging deep and shallow holes, slots, and similar workpieces
- Satin chrome finish



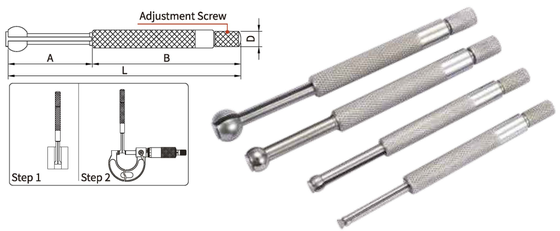

Unit:mm

Code	Range	L	A	B	D
5921-0005	3-5/1/8"-1/5"	76	22	53	φ5
	5-7.5/1/5"-3/10"	78	24	53	φ5
	7.5-10/3/10"-2/5"	88	28	59	φ6
	10-13/2/5"-1/2"	92	32	59	φ6

SPRING CALIPERS AND DIVIDERS SERIES

- Outside Spring Caliper/Inside Spring Caliper/Spring Divider
- Spring Divider — Fully hardened and tempered joints, spring, washers and divider points
- Outside Spring Caliper — Contact ends fully rounded to give accurate dimensions
- Inside Spring Caliper — Ends fully rounded to give accurate contact with a workpiece
- Measuring and transferring precise dimensions and for various measurements
- Precise fine adjustment due to solid nut
- Made of top-grade high carbon steel
- Quick, positive adjustment
- Centrally located adjustment screw to ensure smooth action



Unit:mm

Code	Size	Type
1051-0301	150/6"	outside
1051-0302	200/8"	outside
1051-0303	250/10"	outside
1051-0304	300/12"	outside
1051-0311	150/6"	inside
1051-0312	200/8"	inside
1051-0313	250/10"	inside
1051-0314	300/12"	inside
1051-0321	100/4"	divider
1051-0322	150/6"	divider
1051-0323	200/8"	divider
1051-0324	250/10"	divider
1051-0325	300/12"	divider

WELDING GAUGE

BORN IN ITALY, RAISED BY THE WORLD

MARKING BLACK

Precision Layout Solution



Gage Holes
Measure the Major Diameter of Bolt



Gage Holes
Select Right Size Drills



Pitch Size
Measure the Thread



Bolt Length
Measure Length



Gage Leg
Quick-Check Perpendicularity



Slot Size
Measure Bore Diameter

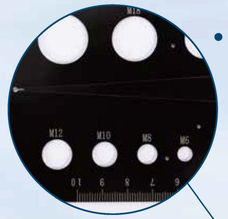

- **BLACK ANODIZED**
  Protective anti-rust coating
- **CNC MACHINED**
  High accuracy & High repeatability & Grounded measuring face



- **LASER-ENGRAVING SCALE**
  Black lines & figures against the sand blasted finish



Code	Product	Style	Size	Pitches	Hole Dia. For Bolt	Slot for Wire and Washer	Remark
8511-0065	Multigauge single piece	Metric	90mm*170mm*1.25mm	0.3mm-3.0mm	M3 - M20	0.8mm - 2.5mm	Can be ordered independently
8511-0066		Inch	3.5"*6.7"*0.05"	10 - 40TPI	No 5-3/4"	0.024" - 0.25"	
1804-1405	Marking Black set	Metric	/				Combination Kit
1804-1406		Inch					

WELDING GAUGE

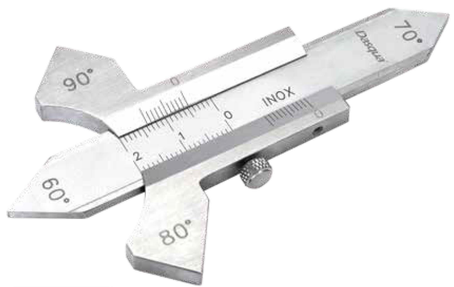

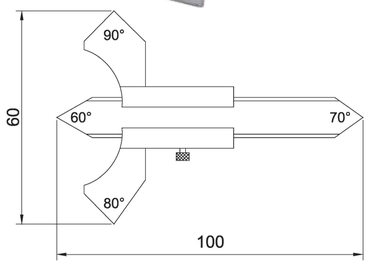

- Used to check the height of weld seam, thickness of fillet weld, bevel angle, etc
- Made of stainless steel, polished
- Measuring range: 20mm
- Slide with clamping screw

Unit:mm

Code	Angles	Range*Graduation
8531-0005	60°,70°,80°,90°	20x0.1

DIGITAL WELDING GAUGE



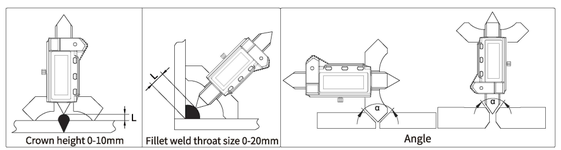

- 60° 70° 80° 90° angle measuring
- Seam crown height inspection
- Fillet weld throat size inspection
- Made of stainless steel, hardened and ground
- LCD display with clear reading, zero-setting at any position
- On/Off button, reading switchable mm/inch
- With data output

Unit:mm

Code	Range	Resolution	Accuracy
8530-1005	0-10/0-20	0.01/0.0005"/1/128"	±0.03

WELDING GAUGE



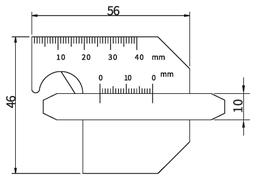

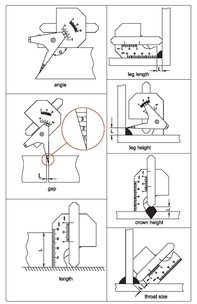

- Automatic weld size measuring
- For accurate calibration of butt and fillet type welds
- Check the throat of fillet weld to determine the leg size of the fillet weld
- Made of stainless steel, hardened and ground
- Stain chrome plated surface

Unit:mm

Code	Measurement	Range	Graduation	Accuracy
8511-0015	Leg Length	0-10	1	±0.5
	Leg Height	0-20	1	±0.5
	Crown Height	0-10	1	±0.5
	Throat size	0-10	1	±0.5
	Angle	90°-150°	5°	±1°
	Gap	1-3	1	±0.5
	Length	0-40	1	±0.5

BRIDGE CAM WELDING GAUGE



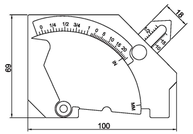

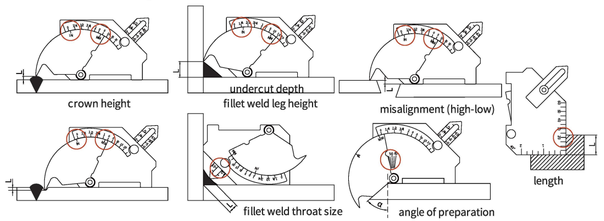

- Bridge cam gauge is a unique, versatile instrument for the inspection of welded surfaces and joints
- Made of high quality stainless steel, this gauge is durable and not easily scratched
- Gauge surface is clearly laser etched which is wear-resisting and ensures a clear reading
- Used to measure angle of preparation(0 to 60degree), excess weld metal (capping size), depth of undercut, fillet weld throat size, fillet leg length, misalignment (high-low), and linear measurements up to 50mm(2 inches)
- Stain chrome finish surface

Unit:mm

Code	Measurement	Range	Graduation	Accuracy
8511-0030	Crown height	0-25(0-1")	1(1/16")	±0.5
	fillet weld leg height	0-25(0-1")	1(1/16")	±0.5
	misalignment(high-low)	0-25(0-1")	1(1/16")	±0.5
	undercut depth	0-2(0-1/8")	1(1/16")	±0.5
	fillet weld throat size	0-20(0-3/4")	1(1/16")	±0.5
	angle of preparation	0-60°	5°	±1°
	Length	0-60(0-2")	1(1/16")	±0.5

WELDING GAUGE

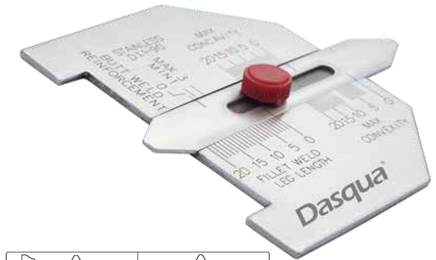

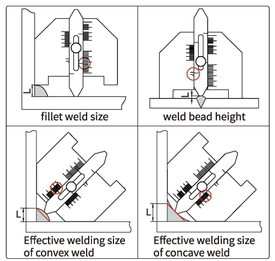

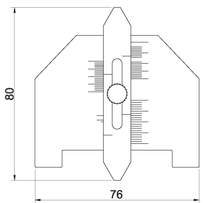

- For accurate calibration of butt and fillet type welds
- Used to measure reinforcement, fillet convexity / concavity throat and leg length
- Made of stainless steel, hardened and ground
- Stain chrome finish surface

Unit:mm

Code	Measurement	Range	Graduation	Accuracy
8511-0020	fillet weld size	0-20	1	±0.5
	weld bead height	0-3	_	±0.5
	Effective welding size of convex weld	0-20	1	±0.5
	Effective welding size of concave weld	0-20	1	±0.5

WELDING GAUGE

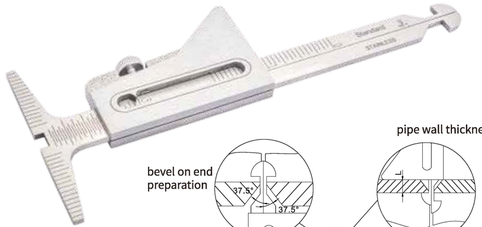

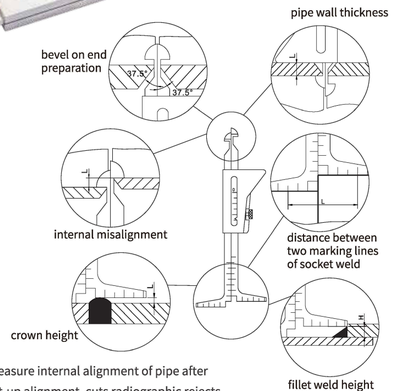

- Measure internal alignment of pipe after fit-up alignment, cuts radiographic rejects
- Measure internal misalignment of pipe before and after tacking
- With opposite movable measuring jaws
- For pipe welds up to 35 mm wall thickness
- Made of stainless steel, hardened and ground, polished surfaces
- With reading window, with fixing screw

Unit:mm

Code	Measurement	Range	Graduation	Accuracy
8511-0025	bevel on end preparation	37.5°	_	±1°
	pipe wall thickness	0-45(0-1-3/4")	1(1/16")	±0.5
	internal misalignment	0-30(0-1-1/4")	1(1/32")	±0.5
	crown height	0-35(0-1-3/8")	1(1/32")	±0.5
	distance between two marking lines of socket weld	11-61(7/16"-2-13/32")	1(1/16")	±0.5
	fillet weld height	0-30(0-1-1/4")	1(1/32")	±0.5

WELDING GAUGE

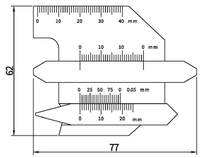



● 8511-0035

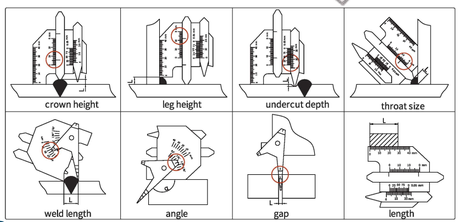

- Used for the measurement of the bevel angle, height, width, gap and undercut depth of weld
- Suitable for the detection of boilers, bridges, ships, pressure vessels and oil pipes
- The gauge consists of four components: main scale, height gauge, undercut depth gauge and multiple-purpose gauge
- Made of stainless steel, hardened and ground
- Stain chrome finish surface

Unit:mm

Code	Measurement	Range	Graduation	Accuracy
8511-0035	crown height	0-10	1	±0.5
	leg height	0-15	1	±0.5
	undercut depth	0-5	0.05	±0.05
	throat size	0-13	1	±0.5
	weld length	0-40	1	±1
	angle	90°-150°	5°	±1°
	gap	1-5	2	±1
	length	0-40	1	±0.5
8511-0040	crown height	0-15	1	±0.5
	leg height	0-15	1	±0.5
	undercut depth	0-5	0.05	±0.05
	throat size	0-13	1	±0.5
	weld length	0-60	1	±1
	angle	80°-160°	5°	±1°
	gap	1-5	2	±1
	length	0-50	1	±0.5

FILLET WELDING GAUGE



● 8511-0050

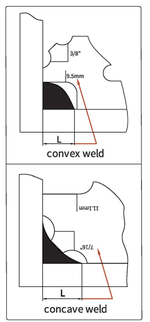

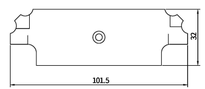

- Permits quick and accurate measuring of the most popular weld fillet sizes in imperial: 1/8"-1" and metric: 3.2mm-25.4mm
- All sizes and numbers are etched into the surface for clear and easier reading
- Check convex & concave weld
- 7 blades are included
- Made of stainless steel
- Stain chrome finish surface

Unit:mm

Code	Size	Accuracy
8511-0045	3,4,5,6,8,9,10,11,12,14,16,19,22,25	±0.5mm
8511-0050	1/8"(3.2),3/16"(4.8),1/4"(6.4),5/16"(7.9),3/8"(9.5),7/16"(11.1), 1/2"(12.7),5/8"(15.9),3/4"(19.1),7/8"(22.2),1"(25.4)	±0.02"(0.5)

COMBINATION KITS

BORN IN ITALY, RAISED BY THE WORLD

2PCS GENERAL PURPOSE MEASURING SET



Product list:

- 1804-1065 Big Screen Digital Caliper
- 4210-2105 Digital Outside Micrometer

Unit:mm

Code	Covering	Range	Resolution	Accuracy
2210-8202	1804-1065	150/0-6"	0.01/0.0005"	0.02/0.001"
	4210-2105	25/0-1"	0.001/0.00005"	0.003/0.00015"

4PCS GENERAL PURPOSE MEASURING SET



Product list:

- 1120-3115 Monoblock Vernier Caliper
- 4111-8105 Outside Micrometer
- 9111-1115 90°Beveled Edge Square
- 9000-3100 Steel Ruler

Unit:mm

Code	Covering	Range	Graduation	Accuracy
2210-8203	1120-3115	0-150/0-6"	0.05/1/128"	0.05
	4111-8105	0-25/0-1"	0.01	0.004
	9111-1115	90°	/	0.007
	9000-3100	0-150/0-6"	0.5/1.0/1/64"/1/32"/1/16"	/

4PCS GENERAL PURPOSE MEASURING SET



Product list:

- 1804-1065 Big Screen Digital Caliper
- 4111-8105 Outside Micrometer
- 9111-1115 90°Beveled Edge Square
- 9000-3100 Steel Ruler

Unit:mm

Code	Covering	Range	Graduation/Resolution	Accuracy
2210-8204	1804-1065	0-150/0-6"	0.01/0.005"	0.02/0.001"
	4111-8105	0-25/0-1"	0.01	0.004
	9111-1115	90°	/	0.007
	9000-3100	0-150/0-6"	0.5/1.0/1/64"/1/32"/1/16"	/

FLEX CHROME MAGNETIC BASE

WITH DIAL INDICATOR SET



Product list:

- 7611-1015 Flex chrome magnetic base
- Dial Indicator(5111-0000 Metric;5122-4210 Inch)
- 5111-1010 magnetic lug back

Unit:mm

Code	Difference	Range	Graduation	Holding power
7611-2005	Inch indicator	0-1"	0.001"	60KG
7611-1005	Metric indicator	0-10	0.01	60KG

FLEX CHROME MAGNETIC BASE

WITH DIAL INDICATOR SET



Product list:

- 7611-1015 Flex chrome magnetic base
- 5111-1010 magnetic lug back
- 5340-8110 Absolute Digital Indicator

Unit:mm

Code	Range	Resolution	Holding Power
7611-0010	0-1"/0-25	0.0005"/0.01	60KG

MAGNETIC BASE

WITH DIAL INDICATOR SET



Product list:

- Optional dial Indicator
- Optional magnetic base

Unit:mm

Code	Range	Dial indicator code	Magnetic base code	Class
7611-1012	0-10	5111-0000	7122-0004	Normal Metric
7611-1013	0-10	5111-0000	7312-0010	Classic Metric
7611-1011	0-1"	5122-4210	7121-0016	Classic inch
7611-1010	0-10	5121-1106	7312-0010	Pro Metric

DISC AND ROTOR FLEX CHROME KITS SET



Product list:

- 7611-0035 Flex chrome shank
- Dial Indicator
  5122-4210 inch version
  5111-0000 metric version

Unit:mm

Code	Range	Graduation
7611-0025	0-1"	0.001"
7611-0030	0-10	0.01

5PCS GENERAL PURPOSE MEASURING SET



Product list:

- 1804-1065 Digital Caliper 0-150mm/0-6"
- 4111-8105 Outside Micrometer 0-25mm*0.01mm
- 5111-0000 Dail indicator 0-10mm*0.01mm,Flat back
- 9111-1115 90°Beveled Edge Square100*70mm,DIN875/0
- 2875-4005 Scriber of 175mm with 90° hook
- 9000-3100 Ruler 0-150mm/6""*0.5mm/1.0mm/1/64"/1/32"/1/16"graduation on front and back

Unit:mm

Code	Covering	Range	Graduation	Accuracy
2210-8210	1804-1065	0-150/0-6"	0.01/0.0005"	0.02/0.001"
	4111-8105	0-25/0-1"	0.01	0.004
	5111-0000	0-10	0.01	0.017
	9111-1115	90°	/	0.007
	2875-4005	/	/	/
	9000-3100	0-150/0-6"	0.5/1.0/1/64"/1/32"/1/16"	/

9PCS GENERAL PURPOSE MEASURING SET



Product list:

- 1804-1065 Digital Caliper 0-150mm/0-6"
- 4111-8105 Outside Micrometer 0-25mm*0.01mm
- 1012-1005 Protractor80*120mm,open Head
- 1501-1024 24pcs Screw pitch gauge 0.25- 7.0mm .Thread Angle: 60°
- 1351-0005 Radius gauge1.0-7.0mm,17 blades
- 1820-0100 20pcs Feeler Gauge 100mm*(0.05-1.0mm)
- 9111-1115 90°Beveled Edge Square100*70mm,DIN875/0
- 2875-4005 Scriber of 175mm with 90° hook
- 9000-3100 Ruler 0-150mm/6""*0.5mm/1.0mm/1/64"/1/32"/1/16"graduation on front and back

Unit:mm

Code	Covering	Range	Graduation	Accuracy
2210-8215	1804-1065	0-150/0-6"	0.01/0.0005"	0.02/0.001"
	4111-8105	0-25/0-1"	0.01	0.004
	1012-1005	0-180°	1°	±10'
	1501-1024	0.25-7(Metric 60°)	/	/
	1351-0005	1.0-7.0	/	/
	1820-0100	0.05-1.0(20pcs)	/	/
	9111-1115	90°	/	0.007
	2875-4005	/	/	/
	9000-3100	0-150/0-6"	0.5/1.0/1/64"/1/32"/1/16"	/

5PCS GENERAL PURPOSE MEASURING SET



Product list:

- 1804-1065 Digital Caliper 0-150mm/0-6"
- 4111-8105 Outside Micrometer 0-25mm*0.01mm
- 5111-0000 Dail indicator 0-10mm*0.01mm,Flat back
- 7122-0004 Magnetic Base with Fine Adjustment 60KG
- 7111-1110 Micrometer Stand

Unit:mm

Code	Covering	Range	Graduation	Accuracy
2210-8220	1804-1065	0-150/0-6"	0.01/0.0005"	0.02/0.001"
	4111-8105	0-25/0-1"	0.01	0.004
	5111-0000	0-10	0.01	0.017
	7122-0004	/	/	/
	7111-1110	up to 100/4"	/	/

12PCS GENERAL PURPOSE MEASURING SET



Product list:

- 1804-1065 Digital Caliper 0-150mm/0-6"
- 4111-8105 Outside Micrometer 0-25mm*0.01mm
- 5111-0000 Dail indicator 0-10mm*0.01mm,Flat back
- 7122-0004 Magnetic Base with Fine Adjustment 60KG
- 1012-1005 Protractor80*120mm,open Head
- 1501-1024 24pcs Screw pitch gauge 0.25- 7.0mm .Thread Angle: 60°
- 1351-0005 Radius gauge1.0-7.0mm,17 blades
- 1820-0100 20pcs Feeler Gauge 100mm*(0.05-1.0mm)
- 9111-1115 90°Beveled Edge Square100*70mm,DIN875/0
- 2875-4005 Scriber of 175mm with 90° hook
- 9000-3100 Ruler 0-150mm/6"*0.5mm/1.0mm/1/64"/1/32"/1/16"graduation on front and back
- 3001-1001 Base Attachment for Caliper

Unit:mm

Code	Covering	Range	Graduation	Accuracy
2210-8205	1804-1065	0-150/0-6"	0.01/0.0005"	0.02/0.001"
	4111-8105	0-25/0-1"	0.01	0.004
	5111-0000	0-10	0.01	0.017
	7122-0004	/	/	/
	1012-1005	0-180°	1°	±10'
	1501-1024	0.25-7(Metric 60°)	/	/
	1351-0005	1.0-7.0	/	/
	1820-0100	0.05-1.0(20pcs)	/	/
	9111-1115	90°	/	0.007
	2875-4005	/	/	/
	9000-3100	0-150/0-6"	0.5/1.0/1/64"/1/32"/1/16"	/
	3001-1001	/	/	/

INSTRUMENT

BORN IN ITALY, RAISED BY THE WORLD

SHORE DUROMETER



SHORE A

- Widely applied in the medium and low hardness plastic, all kinds of rubber, multidimensional fat, leather, wax hardness test and etc
- The product refers to ISO868 and the ISO7619 international standard production

Code	1804-1090
Type	Shore A
Measuring Range	0-100HA
Pressure Needle Range	2.5mm
Pressure Head Diameter	0.79mm
Outline Dimension	115*60*25mm



SHORE C

- Used in measuring the hardness of oak model micro porous material, which includes vesicant, when the compression ratio is 50%, the stress above 0.5kg/cm²
- It also can be used in other similar hardness materials

Code	1804-1095
Type	Shore C
Measuring Range	0-100HC
Pressure Needle Range	2.5mm
Pressure Head Diameter	2.5mm
Outline Dimension	115*60*25mm



SHORE D

- Suitable for hardness test of high degree, such as common hard rubber , hardened resin, acryl plexiglas, thermos plastic rubber, printing plate, fiber
- The product conforms to HG/2489 and other related standard request

Code	1804-1100
Type	Shore D
Measuring Range	0-100HD
Pressure Needle Range	2.5mm
Pressure Head Diameter	0.1mm
Outline Dimension	115*60*25mm

DIGITAL SHORE DUROMETER





SHORE A

- Testing the hardness of soft rubber,printer roller and other elastomer material
- Portable device, rugged plastic housing,front plate made of rugged polyamide
- Large LED display for clear and easy reading
- ON/OFF button and data hold button for one-hand-use

Code	1804-1035
Type	Shore A
Resolution	0.5HA
Measuring Range	0-100HA
Pressure Needle Range	2.5mm
Accurancy	2HA





SHORE D

- Testing the hardness of hard rubber,such as thermoplastic plastic, bowling,plastic floor and so on
- Portable device, rugged plastic housing,front plate made of rugged polyamide
- Large LED display for clear and easy reading
- ON/OFF button and data hold button for one-hand-use

Code	1804-1045
Type	Shore D
Resolution	0.5HD
Measuring Range	0-100HD
Pressure Needle Range	2.5mm
Accurancy	2HD

DIGITAL DUROMETER

- This model is Suitable for measuring thehardness of rubber, plastic and other non-metallic materials. Calibration certificate Included
- With a large, easy-to-read LCD display with backlight. Conforms to ASTM D 2240, ISO7619-1, Wireless mini-printer is available
- Measurement data can be stored, browsing and batch printing, printiong upload to PC
- Measurement mode: Averaging mode, Max Mode, Max-Average mode

Accuracy	⩽ ± 1 H
Display:	128*64 dot matrix LCD with Backlight
Measuring Mode:	AVE, MAX, Timing
Power	Ni-MH Chargeable Battery
Dimensions	150X50.5X29mm
Resolution	0.1H
Memory	500 readings
Communication	USB to PC
Operating Environment	-10 to 40°C, 20 to 80%RH
Weight:	170g
Optional	mini printer, test stand, HAS test block, HSD test block



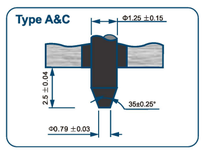

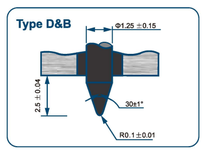

Code	Type	Intenter	Applications
1804-1008	A		Soft vulcanized rubber, natural rubber, nitriles, thermoplastic elastomers, flexible polyacrylics and thermosets, wax, felt, and leathers
1804-1009	C		Medium-hard rubber, thermoplastic elastomers, medium-hard plastics, and thermoplastics
1804-1007	D		Hard rubber, thermoplastic elastomers, harder plastics, and rigid thermoplastics

MiniPrinter	Test Stand
	
HSA Test Block	**HSD Test Block**
	

DUROMETER OPERATING STAND

- For digital shore durometers
- Reduce the deviation caused by manual operation, improve the measurement accuracy and repeatability
- Special structure for stable measuring





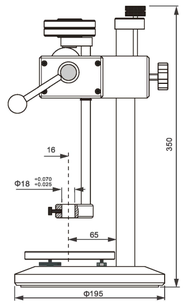

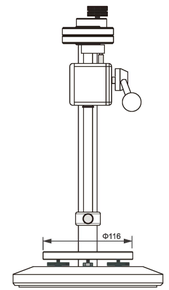

Weights included





Code	1804-1061	1804-1085
Operating Type	Indentor to specimen	Indentor to specimen
Loading Method	Cam loading	Cam loading
Loading Stroke	18 mm	18 mm
Specimen Thickness	60 mm	60 mm
Throat Depth	65 mm	65 mm
Support Table (dia.)	φ116 mm	φ116 mm
Lifting Adjustment	Screw adjustment	Screw adjustment
Table Adjustment	Three-point leveling	Three-point leveling
Net Weight	5.6kg(excluding S weight)	5.6kg(excluding S weight)
Package Weight	7.6kg(excluding D weight)	7.6kg(excluding D weight)
Applicable durometer	Shore A,B,E,O,OO	Shore D,DC,DO

ROCKWELL HARDNESS TESTER

This hardness tester is used for detemining Rockwell hardness of hard alloys, quenched and unquenched steels.



- The high quality casting and fine craftsmanship ensure accurate,consistent readings
- Manual testing process, no need for electric controlling

Code	1804-3607
Maximum load	150 kg (1471N)
Load range	60,100,150,kg(588.4N,980.7N,1471N)
Initial range load	10 kg (98.07N)
Maximum test height	108m/m(4-1/4")
Depth of throat	135m/m(5-1/4")
Maximum depth of spindle below base	50m/m(2")
Size of base	180×465m/m(7"-18")
Machine height	630m/m(24-1/2")
Weight (approx)	65 kg (150lbs)

STANDARD ACCESSORIES	
Large testing tableφ150m/m(5-3/4")	1
Small testing tableφ62m/m(2-3/8")	1
V-block anvilφ58(2-3/16")	1
Diamond penetrator 120°	1
Steel ball penetrator 1/16"	1
Replacement steel ball 1/16"	5
Rockwell A standard test block	1
Rockwell B standard test block	1
Rockwell C standard test block	1
Rockwell C standard test block	1
Rockwell C standard test block	1
Screwdrivers	2
Level adjusting leg	3
Accessory box	1
Dustproof plastic cover	1
Operation manual	1

ROCKWELL HARDNESS TESTER



- Half automatic hardness tester except loading initial force and change force knob. Operation is very convenient and fast
- Color touch screen, displays loading force, indenter type, dwell time, and conversion scale
- Motorized control loading, dwell and unloading, eliminates error by manual operation
- Built-in micro processor auto compute max, min, mean and deviation value, resolution is 0.1HR, largely improve accuracy
- Auto hardness conversion to others scales, no need to check table and improve working efficiency
- Support Multiple languages, English, Turkish, German, etc. Convenient for local customers operation
- Save 2000 single testing results and 1000 group results for reviewing and analysis
- Optional blue tooth mini printer is available

Code	1804-3609
Rockwell scale	HRA、HRB、HRC、HRD、HRE、HRF、HRG、HRH、HRK、HRL、HRM、HRP、HRR、HRS、HRV
Preliminary Test Force	10Kgf(98.07N) Permitted Error：±2.0%
Total force	60Kgf(588.4N)、100Kgf(980.7N)、150Kgf(1471N) Permitted Error：±1.0%
Duration time	Adjustable 1-60s
Hardness Indication	5.2" Touch Screen, Resolution:640x480
Resolution	0.1HR
Loading Control	Auto Loading/Dwell/Unloading
Hardness Conversion	HRC、HV、HBS、HBW、HK、HRA、HRD、HR15N、HRB HR30N、HR45N、HS、HRF、HR15T、HR30T、HR45T、
Conversion Standards	ASTM、DIN
Language Option	Chinese, English, German, Portuguese, Turkish, Czech, Korean
Correction Range	-3.0HR to +3.0HR, Step 0.1HR
Data Memory	2000 Single Measuring Result, Curve Analysis, Results Reviewing And Analysis
Data Output	Optional Blue Tooth Mini Printer
Instrument Throat	165mm
Maximum test height of Brinell and Vickers	175mm
Power supply	AC220V/50Hz;AC110V/60Hz
Dimension(LxWxH)	546x182x755mm
Gross/Net Weight	110Kg/90Kg

HEIGHT GAUGE



Code	3000-0300	3000-0600
Measuring Range	300	600
Expanded Measuring Rang(mm)	570	870
Dia. of Probe Holder(mm)	φ8	
Resolution(mm)	0.01/0.001/0.0001	
MPE(μm)	±(2.6+5) μm (L in [m])*	
Repeatability(μm)	Of Plane≤1μm* Of Aperture≤3μm*	
CSTN	VGA、6.4"	
Max Speed of Clicking Driver(mm/s)	75	
Device Driver	Machinery	
Measuring Force(N)	1.5±0.5	
Working Temperature(℃)	10 to 40 (℃)	
Storage Temperature(℃)	-10 to 60 (℃)	
Water Proof Grade	IP40	
Unit	mm/in	
Certificate	√	
Height(mm)	709	1009
Weight(kg)	20	22

*In test condition and with standard probe

PORTABLE LEEB HARDNESS TESTER

This model is a small, light and portable tester, which is most suitable for testing of heavy, big or outdoor metal parts. It is easy to be used and accurate on curved test surfaces. Especially, it can automatically compensate effect of weight which according to the test direction, can be operated with touch screen and test data could be linked into PC. D.

- Measure in any direction
- Uses wireless IR to communicate with printer
- Conforms to the Standard
- ASTM A956-02 & DIN 50156



Code	1804-4605	1804-4606
HL display range	170～960HLD	
Repeatability	6HLD	
Testing direction	All direction	
Optional Impact Device	D, DC, DL, D+15, C, G	
Display	3.9" 2 40*320(with touch screen), Bright and clear LCD display with back light	
Operating voltage	3.6V (rechargeable Ni-MH battery)	
Charging power supply	DC5V/1A	
Printer	With mini wireless printer	Without mini wireless printer
Operating environment	Temperature -20℃～+50℃; Humidity 20%～85%	
Storage environment	Temperature -30℃～+70℃; Humidity 5%～95%	
Dimensions	130mm*86mm*28mm	
Weight	300g (include D type impact device)	
Accessories	Display Unit, Impact Device D, Test Block, Mini-printer, Charger, Little Support Ring, Cleaning Brush USB Cable, PC Software CD.	
Communication	USB to PC for transfer data	
Certificate	CE	
Options Impact Device	DC; DL; D+15; c; G	

PORTABLE LEEB HARDNESS TESTER



- This Portable Hardness Tester is a small, light and portable tester
- It is most suitable for testing of heavy, big or outdoor metal parts
- It conforms to the Standard ASTM A956-02 & DIN 50156

Code	1804-4610	1804-4611
Accuracy	± 6 HL	
Scales	HRC, HRB, HB, HV, HSD, MPa	
Display	Bright and clear LCD display with backlight	
Testing direction	All direction	
Optional Impact Device	D, DC	
Printer	With mini wireless printer	Without mini wireless printer
Operating voltage	4.5V (3 AAA batteries)	
Operating environment	Temperature -10~+40°C, Humidity 20%~85%	
Storage environment	Temperature -30~+80°C, Humidity 5%~95%	
Dimensions	152mm*83mm*27mm	
Weight	Approx.190g	
Accessories	Display Unit, Impact Device D, Test Block, Mini-printer, Charger, Little Support Ring, Cleaning Brush	
Certificate	CE	

PORTABLE LEEB HARDNESS TESTER

- This mode is recommended for the exclusive measurement of solid and heavy components in the Brinell range.
- Unit G places low demands on measuring location surface finish.
- Typical applications: forgings or solid castings.

Impact Device integrated.
Direction sensor integrated
Highly accurate (±6HL) in any impact direction(360°) – automatically
Integrated display of results for HB, HRB hardness scales.
Large, high contrast LCD for optimum viewing in all conditions.
Easy calibration.
Full USB communication with PC, software included free of charge.
Internal storage of data with day and time.
Intelligent sleep mode.



Code	1804-4615	1804-4616
Battery	Rechargeable Li ion, charges through device USB port.	
Standards and Guidelines applied	DIN 50156 (2007), DGZfP Guideline MC 1 (2008), VDI / VDE Guideline 2616 Paper 1 (2002), ISO 18625 (2003), ASTM A956 (2006), GB/T 17394 (1998), JB/T 9378 (2001), JJG 747(1999), CNAL T0299 (2008), JIS B7731 (2000).	
Printer	With mini wireless printer	Without mini wireless printer
Operating environment	Temperature: -10~+60°C; Humidity: 20%~85%.	
Storage environment	Temperature: -30~+80°C; Humidity: 5%~95%.	
Dimensions	254 x 52 x 32 mm	
Weight	230g	

Material	HLG	HRB	HB
Steel	300-750	/	90-646
Grev cast iron	340-600	/	92-326
Ductile Iron	340-600	/	127-364

ULTRASONIC HARDNESS TESTER

Designed for rapid non-destructive testing of hardness:

1. metals and alloys on standardized international scales of hardness: Rockwell (HRC), Brinell (HB), Vickers (HV);
2. metals with distinctions in properties of steel (e.g., non-ferrous metals, alloys of iron and others) and using five additional scales for calibration;
3. use of the scale of tensile strength (Rm) for determining the tensile strength of carbon steel products pearlitic by automatically converting from the scale of hardness Brinell (HB).



- UCI probe
- Testing of products with thickness over 1mm
- Wide range of hardness value
- Ease in operation
- Minimum number of imprints
- Automatic recognition of probe
- Graphical display with backlight
- Control of the batteries
- New, intuitive menu with tips on the buttons
- Extended temperature range (cold-resistant, down to -20 °C)
- Internal memory and connection with PC
- Rubber protective housing-case

Code	1804-5005
UCI probe types	1kgf (10N) 2.2 lbf, 5kgf (50N) 11lbf
Indenter	UCI (diamond Indenter)
Measuring direction	Any direction 360°
Measurement hardness range	- Rockwell, HRC 20 - 70 - Brinell, HB 90 - 450 - Vickers, HV 230 - 940 - temporary resistance (tensile strength)Mpa 370 - 1740
Accuracy	HV+ / - 3%; HRC+ / - 1,5%; HB+ / - 3%
Hardness scale	HRC, HB, HV, MPa
Materials	- UCI probe - pre-calibrated for steel. - Additional custom materials for calibration.
Operating temperature	-20 to +50 ° C
Dimension	120x60x25mm
Weight	Weight of electronic unit with batteries, no more than 0.2kg
Power supply	2 AA batteries

COATING THICKNESS GAUGE



- Very compact size with integrated probe.
- Magnetic induction method (ISO 2178, ASTM 07091),
- Measurement of non-magnetic coatings on magnetic subsrtates.
- Data memory is up to 500 readings.
- Ready to measure immediately without calibration.
- Easy to perform zero-point correction provides correct
- msasurement results for measuring applications
- with little changes in shape and substrate material.
- The one-point calibration function allows for an adaptation
- in cases of severel changes in shape or substrate material and
- enables high-precision measurements in selected measurement ranges.
- Statistic function allows for evaluation of a measurement series and display of the most significant characteristic statistical values.

Code	1804-2005
Test method	Magnetic induction
Measuring Range	0- 1250μm (0 -50 mil)
Resolution	0 - 999μm: 0.1μm, ⩾1000μm: 1μm
Accuracy	0- 100μm: ± 2 .0 μm, 101-1250μm⩽2.5%
Data Memory	500 readings
Display	Graphic LCD with
Power Supply	1.5V*3 (AAA alkaline batteries)
Operating Temperature	0-50°C
Dimension	150X50.5X29mm
Weight	110g
Certificate	CE
Accessories	Thickness gauge, Substrate, Certification foils set , User 's manual,Manufacturer's certificate.

COATING THICKNESS GAUGE



- Very compact size with integrated probe.
- Magnetic induction method (ISO 2178, ASTM 07091),
- Measurement of non-magnetic coatings on magnetic substrates.
- Quick one-hand operation.
- Place instrument on specimen and see the measured value.
- Ready to measure immediately without calibration.
- Easy to perform zero-point correction provides correct measurement results for measuring applications with little changes in shape and substrate material
- The one-point calibration function allows for an adaptation in cases of severe changes in shape or substrate material.
- Data transmitting to PC via USB cable. Stastistic function allows for evaluation of a measurement series and display of the most significant characteristic statistical values.

Code	1804-2010	1804-2011
Test method	Magnetic induction	
Measuring Range	0- 1500μm (0 -60 mil)	
Resolution	0 - 999μm: 0.1μm, ⩾1000μm: 1μm	
Accuracy	0- 100μm: ± 1.5 μm, 101-1500μm⩽1.5%	
Data Memory	Upto 1500 readings	
Display	Graphic LCD with backlight	
Power Supply	1.5V*3 (AAA alkaline batteries)	
Operating Temperature	0-50°C	
Dimension	88x67x30mm	
Weight	120g	
Printer	Without mini wireless printer	With mini wireless printer
Accessories	Thickness gauge, Substrate, Certification foils set , Data cable,Data logger software, Sheath, User 's manual, Manufacturer's certificate.	

ULTRASONIC THICKNESS GAUGE

- Two display units: metric and imperial
- Automatic calibration to zero: automatically correct the system errors
- Automatic non-linear compensation: within the full range, computer
- Software is used to correct the non-linear errors of the probe for the purpose of improving the accuracy
- The upward and downward adjustment keys enable prompt selection of sound velocity, thickness, and check the thickness memory units
- Prompt for coupling state: provide coupling indication and the observation of the stability of the indication can tell if the coupling is normal
- Ten thickness values can be stored without loss after turn-off, which is very convenient for measuring in field and high platform
- Measuring sound velocity: according to the test block’ s thickness, sound velocity can be measured directly needless to search in the conversion table
- Sound velocity of five different materials can be stored
- Low voltage indication
- Automatic turn-off
- All keys enclosed----oil proof for longer service life



Code	1804-2015	1804-2020
Measuring range	1.2~225.0mm	
Minimum display unit	0.1mm	0.01mm
Display type	4-digit	
Sound velocity range	1000m/s~9999m/s	
Measuring error	±(1%H+0.1) mm, H is the actual thickness of the object to be measured	
Power supply	two AAA alkaline cells 1.5V	
Power consumption	working current is smaller than 20mA(3V)	
Range of operating temperature	0℃~ 40℃	
Dimensions (mm)	124×68×27	
Weight (g)	120	

Standard Delivery	
Main unit	1
5PΦ10 probe	1
Couplant	1
AAA battery	1
TIME certificate	1
Warranty card	1
Instruction manual	1

Optional Accessory	
	5P 10/90 probe (1.2~225.0mm)
	SZ2.5P probe (3.0~300.0mm)
	7PΦ6 probe (0.75~60mm)

DIGITAL SURFACE ROUGHNESS GAUGE

- Electro mechanical integration design, small volume, light weight, easy to use
- Using DSP chip to control and data processing, high speed, low power consumption
- 128 x 64 OLED dot matrix display, digital / graphic display; highlight no perspective
- Intuitive and rich display information, can display all the parameters and graphics
- Compatible with ISO, DIN, ANSI, JIS national standards
- Residual quantity icon, prompting the user to charge
- Continuous working time: more than 20 hours
- Real-time clock settings and display, convenient data recording and storage
- With automatic dormancy, automatic shutdown and power saving function
- Reliable control motor to go dead circuit and software design
- Measurement information display, menu prompt information, false information and switch machine and other tips that information
- Can be connected to a computer and printer
- Optional different sensor, measuring platform, mini printer, extension rod and other accessories
- Plastic shell, portable, high reliability
- Optional bluetooth function



Code	1804-6305
Testing parameters	Ra,Rz,Rq,Rt,Rp,Rv,R3z,R3y,RzJIS, Rsk,Rku,Rsm,Rmr,Rx;
Measuring range (um)	Ra: 0.005-16.000 Rz: 0.02-160.00
Sample length (mm)	0.25, 0.80, 2.50
Evaluation length(mm)	(1-5)L
Maximum drive stroke	17.5mm/0.7inch
Indication accuracy	0.001
Indication error	±(7-10)%
Variability	<6%
Data Storage	100 groups
Power	Rechargeable li-battery
Working temperature	-20°C~40°C
Relative humidity	<90%
Size	158mmx63.5mmx46mm
Weight of Host	0.3kg

Standard delivery	
Host	1
Standard Sensor	1
Calibration block and bracket	1
Bracket	1
Charger	1
Adjustable support	1
Operating manual	1
Warranty card	1
Certificate of approval	1
Instrument case	1

SURFACE ROUGHNESS GAUGE SET

- All standard roughness gauge included together with comparison chart
- Easy to checking all surface roughness.
- Set include gauge as below:
  consist of 30 specimens .size: 7/8x3/8",including:
  2 specimens checking Flat lapping 2 and 4 μ" AA
  4 specimens checking External grinding 8,16,32 and 63 μ" AA
  6 specimens checking surface grinding 2,4,8,16,32 and 63 μ" AA
  6 specimens Turing 16,32,63,125,250 and 500 μ" AA
  6 specimens checking Vernical milling 16,32,63,125,250 and 500 μ" AA
  6 specimens checking Horizontal milling 16,32,63,125,250 and 500 μ" AA





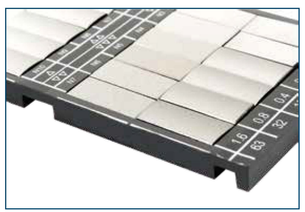

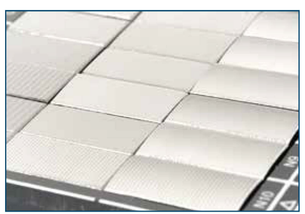

Code	Pieces
1804-6310	30

DIGITAL FORCE GAUGE

- Ergonomic, durable, heavy-duty metal construction
- Touchpad to minimized disturbance
- Automatic reversible display
- Automatic display direction converting
- Variety of alarm output function
- USB port for upload to PC
- 10N,20N,50N,100N,200N,500N available



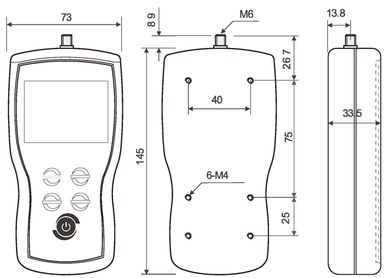

Accuracy	±0.2% FS
Display	160*128 matrix LCD with LED Backlight
Units	N, gf, kgf, ozf, and lbf
Measuring Mode:	Track, Peak, AutoPeak
Overload Capacity	120% F.S
Sampling Rate	2000 Hz
Memory	1000 data
Temperature Effects	<0.03% FS/ ℃
Power	3.6VDC Ni-MH batteries
Charger / Adaptor	USB/BM charger, 110~240VAC
Outputs	USB, Set point output, RS232C
Operating Environment	-10 to 40℃ , 20 to 80%RH
Selectable Units	N, kgf, lbf, ozf and/or gf
Dimensions	160*73*34mm
Weight	0.7 kg (1.5 lb)

MiniPrinter	Rs232 Cable	Ergonomics measuring kit
		

Motorised Test Stand	Manual Test Stand
	

Code	Capacity / Resolution					
	N	Kgf	Lbf	Ozf	Gf	mN
1804-1105	10/0.001	1/0.0001	2.2/0.0005	35/0.01	1000/0.1	10000/1
1804-1115	1000/0.1	100/0.001	220/0.05	3500/1	-	-

DIGITAL FORCE GAUGE



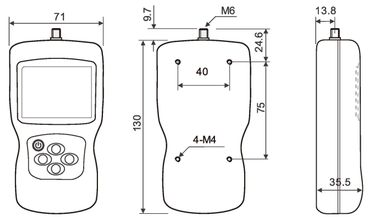

- Ergonomic, durable, heavy-duty metal construction
- Lighter weight, more suitable for handheld operation
- Reversible display
- Charger with US/EUR/UK Plugs selectable
- 50N,100N,500N available

Accuracy	± 0.3% F.S
Display	160*128 matrix LCD with LED Backlight
Units	N, gf, kgf, ozf, and lbf.(Selectable
Measuring Mode:	Track, Peak, Preset
Overload Capacity	120% F.S
Sampling Rate	1000 Hz
Memory	500 data
Temperature Effects	<0.03% FS/ ℃
Power	Ni-MH rechargeable batteries
Charger / Adaptor	USB charger, Input:110~240VAC
Outputs	USB, Set point output, RS232C
Operating Environment	-10 to 40℃ , 20 to 80%RH
Selectable Units	N, kgf, lbf, ozf and/or gf
Dimensions	150*72*33mm
Weight	0.45 kg (1 lb)

MiniPrinter	Rs232 Cable
	
Motorised Test Stand	**Manual Test Stand**
	

Code	Capacity / Resolution				
	N	Kgf	Lbf	Ozf	Gf
1804-1120	10/0.01	1/0.001	2.2/0.001	35/0.01	1000/1
1804-1125	1000/1	100/0.01	220/0.1	3500/1	-

FORCE GAUGE







Analog Force Gauge with compact size, high accuracy, they are easy to operate and handy to carry out, and can show the unit of newton and kilogram at the same time. The PEAK/TRACK knob of it can switch between the peak value load test and the continuous load test. They are excellent products which can take the place of the old style force gauges, and widely applied in electric, high & low voltage electric appliance, hardware, automobile parts, lighter and ignition system, light industry, mechanical, textile and so on industries for test of pull or push load test insertion force or pull and destructive experiment.

- The compact design, easy to carry
- The operation is simple and can be used combining with all kinds of fixture;
- The peak value holding function and duration test function switch freely;
- Newton and kg, according to two units at the same time do not need to unit conversion;
- Can be installed on a variety of test the machine as a dedicated tester use
- 10N,100N,500N available

Code	Capacity(N)	Graduation(N)
1804-1130	10	0.5
1804-1131	50	0.25
1804-1132	500	2.5

VISION MACHINE SYSTEM MANUAL



APPLICATION
Widely used in the field of electronics, machinery, instrument and plastic,
G series video measuring system is used in two dimension measuring.

- High resolution imported color camera
- By availing the auxiliary light adjusting function of the software, the user knows
- whether the light is saturated.
- The laser indicator can quickly locate the target workpiece, which is suitable for measuring sophisticated workpiece.
- Auxiliary height measuring can be achieved.
- "T" groove type worktable can house various fixtures
- The resolution of the linear scale is 0.5um
- Foot switch and software facilitate operation of the machine

Code	1804-7006
Metal worktable size(mm)	500x330
Glass worktable s1ze(mm)	350x250
Travel(mm)	300x200
X,Y, Z axis resolution	0.5μm
Accuracy(μm)	E1XY=(2.5+L/IOO)μm
Weight (kg)	140
Z axis travel (mm)	200
Camera	1/3" color CCD camera
Zoom lens:	0.7X-4.5X
Total magnification:	26.6X -171X
Field view	8.1mm -1.3mm
Power	AC 100-240V 50/60Hz
Spare parts	I .OX lens cone (standard)
Optional	Crosshair, DC3000 digital display, Renishaw MCP probe,coaxial light lens.

SEMIAUTOMATIC VISION MACHINE SYSTEM



Widely used in the field of machinery, electronics, instrument and plastic
CNC video measuring system is used in two dimension measurement, especially
in non-contact measuring, quick batch measuring, and measuring of sophisticated workpiece.

- Automatic focusing, automatic edge detection, powerful programming and automatic measuring function
- Sub pixel subdivision technology helps improve edge resolution
- The machine can be operated by either the joystick or the software programming
- SPC data processing contributes to fixture measurement in large scale
- Servo motor control in X, Y, and Z axis leads to quick and high precision positioning and stable operation
- Independently developed embedded module control system ensures more stable operation by integrating the sophisticated control system within the instrument
- The five- ring-eight-section surface cold light source is suitable for measuring sophisticated workpiece
- The laser indicator can quickly locate the position of the workpiece

Code	1804-7005
Metal worktable size(mm)	500x330
Glass worktable s1ze(mm)	350x250
Travel(mm)	270x170
X,Y, Z axis resolution	0.5μm
Accuracy(μm)	E1XY=(2.5+L/IOO)μm
Weight (kg)	168
Z axis travel (mm)	150
Camera	1/2" color CCD camera
Zoom lens	0.7X-4.5X
Total magnification:	20X -128X
Object view	11.1mm -1.7mm
Power	AC 100-240V 50/60Hz
Spare parts	0.5X lens cone (standard)
Optional	Auto zoom lens, laser shifter, MCP probe

DIGITAL MICROSCOPE

- The instrument has a long working distance, wide field of view, and high-definition Image quality
- Designed with 0.3X 0.5X, 0.75X 1.5X 2X series of auxiliary objective lenses and 0.35X, 0.5X, 0.75X, 1X, 1.5X, 2X series of photographic eyepieces
- According to the requirements of users in different occasions, there are a variety of lighting devices specially designed. You can choose to use upper and lower double halogen lamps, upper and lower halogen lamps, single halogen or single fluorescent lamps, ring fluorescent lighting, optical fiber cold light source lighting, and Optional image analysis device for external processing of image analysis
- The brackets are available in column type, mirror arm type and universal bracket



Code	1804-7010
Zoom scale of objective	0.7×—4.5×
Photography Eyepiece	0.5×
Round working stage diameter	ф95mm
Knob adjustable range	60mm
Eleveator adjustment Range	250mm

STEREO ZOOM MICROSCOPE

- Image always in focus throughout zoom range
- Stereo-tube can be rotated a full 360°for viewing at any angle
- Bilateral zoom control knob adds convenience and increases operator effiency
- Diopter adjustment for both eyepieces



Code	1804-7015
Zoom scale of objective	0.7×—4.5×
Eyeiece and view field diameter	WF10X , 20mm
Total magnification	0.7×—4.5×
Working distance	95mm
Interpupillary adjustment distance	55-75mm
Round working stage diameter	50 mm
Dioptric adjustment range	±5diopter
Illumination	Input voltage :AC 110V or 220V
Output	Oblique illumination:12V,10W halogen lamp (with cup)Transmitted illumination:12V,10W halogen lamp(altermative lamp:5 W fluorescent lamp)

TABLE MAGNIFIER WITH ILLUMINATION

- The LED magnifying lamp is portable and can be used whenever you want
- Lens size: 5"(127mm)
- Diopter: 3diopter/5diopter/8diopter for choice
- Optional with switching power
- Life of the LED: 20000h
- Luminance: 1000Lux
- Colour available: white



Code	1030-2005
magnification	2.25x
Lens	3D/5D/8D
Lens size	5"(127mm)
Illumination	60pcs LED, 12W
Power	100-240V~; 50/60Hz
Product size	226x56x1185mm

DIGITAL POCKET SCALE

- Material:ABS engineering plastic housing and stainless steel table-boa
- Display: LCD display with blue backlight
- Equipped with a high precision strain gauge sensor system for accurate weighing
- Stainless Steel platform and Ultra-thin (19mm thickness)
- Multiple weighing units : G/ CT/OZT/OZ/ /DWT / GN
- Zero setting and tare function, counting and weighing function, auto zero tracking
- Low battery indication and overload warning
- 2*AAA battery, easy to change and long stand-by time
- Auto power off, when there is on operation for a certain time
- Self-test when turned on



Code	1030-2010
Scale Size	16.4X10X2cm
Platform Size	11.3X9cm
Display size	4.6X4.8X0.11cm
Product net weight	300g

WEIGHING SCALES

- Rechargeable battery inside ,low power consumption RS-232 interface for option
- RS-232 interface for option
- Display: LCD display with blue backlight
- Capacity:6kg,15kg,30kg
- Precision 1/6000, 1/15000,1/30000



Code	1030-2015	1030-2017	1030-2019
Capacity	6KG	15KG	30KG
Display	LED/LCD		
Counting scale	16 keys /24keys with 7 memory		
Weighing scale	8 keys(LCD), 6 keys/8 keys		
Pan size	210mm/270mm (19 mold/queen mold) 325*225mm (king mold0		
Precision	1/6000	1/15000	1/30000

WEIGHT SETS

- Made with stainless steel material
- With inspection certificate.



Code	1030-2020	1030-2025	1030-2030
Range	1mg-100g	1mg-200g	1mg-500g
Weight			1x 1mg weights
		1x 1mg weights	2x 2mg weights
	1x 1mg weights	2x 2mg weights	1x 5mg weights
	2x 2mg weights	1x 5mg weights	1x 10mg weights
	1x 5mg weights	1x 10mg weights	2x 20mg weights
	1x 10mg weights	2x 20mg weights	1x 50mg weights
	2x 20mg weights	1x 50mg weights	1x 100mg weights
	1x 50mg weights	1x 100mg weights	2x 200mg weights
	1x 100mg weights	2x 200mg weights	1x 500mg weights
	2x 200mg weights	1x 500mg weights	1x 1g weights
	1x 500mg weights	1x 1g weights	2x 2g weights
	1x 1g weights	2x 2g weights	1x 5g weights
	2x 2g weights	1x 5g weights	1x 10g weights
	1x 5g weights	1x 10g weights	2x 20g weights
	1x 10g weights	2x 20g weights	1x 50g weights
	2x 20g weights	1x 50g weights	1x 100g weights
	1x 50g weights	1x 100g weights	2x 200g weights
	1x 100g weights	2x 200g weights	1x 500g weights
			1x 1kg weights

MULTIFUNCTION VIDEO SCOPE



- 3.5" color LCD with high visibility
- Flexible probe with memory
- Fully adjustable LED lights
- With function of taking photos,video,rotation,partial zoom,
- TF memory card and USB interface
- The monitor can apart from the grip to transmit image wirelessly
- Four wireless trequency for your choice

This Multifunction video inspection has been designed as a user friendly and economical way of solving hidden problems and increasing productivity (eg. Inspect vent pipe and system of air conditioner, machine equipment, engine and so on)
It is widely applied for maintenance of the industry,the building,the aviation, the vehicles also easy to inspect the pick up samll objects,record image

Code	1030-2035
Viewable angle	60°
Focal length	10mm
Outer diameter of camera head	5.5mm (accessories: mirror, ball guide and screw thread protector)
Probe length for choice	1m/2m/3m or customized (max length 15m including extension)
Extension for choice	1m, 2m, 3m
Image display	3.5"TFT/LCD
Image storage media	Micro SD card (Support up to 16G)
Image resolution	640×480 pixels
LCD Resolution	320×240 pixels
Image zooming	4 times
TV output format	NTSC/PAL
Wireless transmission frequency	2414MHz、2432MHz、2450MHz、2468MHz
Wireless transmission distance	Up to 10M; If no obstacles, will more than 10M
Attachment	Micro SD card、one into two cable、Micro SD to SD transition pocket、TV cable、USB cable
Probe length	100cm or your required length
Probe and camera head protection	IP67

INFRARED THERMOMETER

- It is widely applied for measuring temperature in the automobile, the electric power, the chemical industry,the food processing and so on
- Measure the surface temperature at a safe distance
- Auto power off





Code	1030-2001
Range	-20℃～320(℃-4°F～608)°F
Pixel	8:1 optical resolution
Temperature Unit	℃ or °F selectable
Accuracy	+/- 4OF(2OC)

INFRARED THERMOMETER WITH LARGE RANGE

- During the measurement, the max. reading will be displayed beside the "MAX" icon
- LASER EMITTER: Class IIIa Laser (American Standard), or Class II Laser (European standard)
- Laser pointer
- Easy to read digital LCD display with blue backlight





Code	1030-2003
Range	-40℃～580℃(-40°F～1076°F)
Resolution	±0.1℃
Display resolution	630～660nm
Optical ratio（D：S）	12：1
Spectral Response	8～14μm
Response Time	500mSec，95% response
Repetition	1% of reading or 1℃

INFRARAED THERMAL IMAGER



- This instrument is a handheld thermal imager, which is powered by four 1.5V AA (or equivalent) batteries
- This instrument image display resolution is 320 x 240 pixels. The temperature of the center point of the displayed measured surface and the highest and lowest temperature of the displayed measured surface can be displayed. You can select any of the three image modes: infrared image, visible image, fusion image
- Captured images can be saved in the TF card, and you can view them through menu and can edit the image files on a computer via USB port



Code	1030-2002
Range	-20~+400℃
Image display resolution	320 x 240 pixels
Display	2.4 inches
Color Palettes	3
Detector resolution	32x32
Infrared Spectral Band	8um-14um
Emissivity correction	0.01-1 (adjustable)
Response time	200ms
Built-in Digital Carema	640*480
Storage medium	TF Card
Power supply	4x1.5V AA (or equivalent) batteries

NON-CONTACT DIGITAL TACHOMETER

- The streamlined appearance design, the body and the palm perfectly match, to ensure more convenient and comfortable use
- Wide application range, large measuring range, high resolution and small error
- Large screen display, clear reading, no parallax
- Automatically memorize the maximum, minimum, final value and 500 instantaneous values
- When the battery voltage is lower than the specified value, it will automatically indicate



Code	1030-2051
Measuring Range	2.5～99999RPM
Resolution	0.1 RPM (0.5～999.9 RPM) 1 RPM (above 1000 RPM)
Measuring distance	50～500mm
Product Size	160mm×74mm×37mm
Product Weight	180g (including battery)
Range Selection	Automatic switching
Accuracy	±(0.05%+1digit)
Power supply	3×1.5V AA UM-4 batteries
Operating Temperature	0～40°C

CONTACT DIGITAL TACHOMETER

- The tachometer uses microcomputer (CPU) technique; anti-jamming technique for contact measurement of rotation speed (RPM), surface speed (m/min), and contact length (m)
- Wide measuring range and high resolution
- Large screen LCD display provides clear reading
- White back light guarantee reading in any light environment
- Low battery voltage indication
- Surface speed wheel with groove to test surface speed or length of wire, cable, or rope conveniently
- Smooth housing design, comfortable to hold and use



Code	1030-2056
Measuring Range	0.5~19999 RPM；0.05~1999.9 m/min；0.05~99999 m
Resolution	Rotation Speed: 0.1 RPM (0.5~999.9RPM) 1 RPM (above 1000RPM) Surface Speed: 0.01m/min (0.05~99.99m/min) 0.1m/min (above 100m/min)
Contact Length	0.02m (0.05~99999m)
Product Size	170mm x 70mm x 35mm
Accuracy	± (0.05%+1digital)
Sampling Time	0.8second (over 60RPM)
Power supply	3x1.5V AA battery
Time Base	6MHz Quartz crystal

DIGITAL SOUND LEVEL METER

- Altitude up to 2000 meters
- Relative humidity 75% max
- Operation temperature from 0 - 40°C
- Operation Environment: 0 - 40°C（32 - 104°F）10 - 75%RH
- Storage Environment: -10 - 50°C（14 - 122°F）10 - 90%RH



	1030-2061
Measuring Range	(28)30dB -130dB
Resolution	0.1dB
Accuracy	±1.5dB(reference conditions 94dB@1kHz)
Response time	FAST 125ms / SLOW 1sec
Display Update	2 times / second
Frequency Range	31.5Hz - 8KHz
Frequency Weighting	A / C
Battery Life	Approximately 110 hours
Power supply	One 9V battery
Product Size	185(L)x65(W)x35(H)mm
Product Weight	150g (including battery)
Accessories	9V battery, instruction manual

BATTERY ACID AND ENGINE COOLANT REFRACTOMETER

- The refractometer measures the freeze point of automotive coolants (propylene glycol and ethylene glycol) from 32°F to -60°F
- It also indicates the specific gravity of battery acid and provides a quick reference of battery charge condition
- It only requires a sample of 2 or 3 drops for fast and accurate readings
- Automatic Temperature Compensation provides repeatable results
- Comes complete with storage case and a screwdriver and vial of distilled water used for calibration







Code	1030-2065

HIGH ACCURACY DIGITAL HEIGHT GAUGE

- High accuracy for more accurate measuring
- Small in size and easy to move
- Wide applicable temperature range, cam be used normally during 0-40°C
- High durability and the maximum measuring height up to 100mm



Normal
7712-0035



Classic
7712-0040



Pro
7712-0045

HIGH ACCURACY DIGITAL HEIGHT GAUGE

Code	7712-0045	7712-0040	7712-0035
Measuring Range	0-50mm		
Accuracy (20°C)	⩽1μm	⩽1.5μm	⩽3μm
Repeatability (20°C)	0.2μm	0.5μm	1μm
Min. Readout	0.1μm	0.5μm	1μm
Response Speed	Max. up to 5000mm/s		
Measuring Force	1.0-1.5N		0.8-1.2N
External Output	USB		
Display	8 Bits Green LED		7 Bits Green LED
Probe	Ball Probe, Flat Probe, Conical Probe		
Unit	mm/inch		
Proper Working Environment	Temperature:0°C-40°C ; Humidity:20%-80%		
Table Size/mm	130x130	130x130	200x250
Power Adapter	Input: AC100-240V 50/60Hz ; Output:DC 5V/1A		
Accesories	Stand, Ball Tip, Flat Tip, Conical Tip,Handle , Power Adaptor		
Optional Accesories	Data Transmission Kit, Special Tips, Portable Battery		
Size/mm	200x138x397	200x138x397	250x200x387
Weight	11.6kg	11.6kg	25kg